Nice

Catalogue 2019/20

Gate & Door.

Gate, garage door and barrier automation and control systems catalogue.

KOVOPOLOTOVARY.CZ

KOVOPOLOTOVARY.CZ

Nice Gate&Door

Catalogue 2019/20

4 Why Nice

19 Hi-Speed range

39 Systems for swing gates

89 Systems for sliding gates

115 Barrier gate operator systems

135 Systems for garage and industrial doors

169 Control systems

211 Accessories

240 Control units

256 Installation diagrams

272 Compatibility guide for automation systems

276 Product code alphabetical index

KOVOPOLOTOVARY.CZ

Marina Bay Sands Hotel

Singapore

Control systems for interior blind and curtain automation.

Münchner Stadtbibliothek

Laim, Munich, Germany

Automation of external roller blinds and awnings.

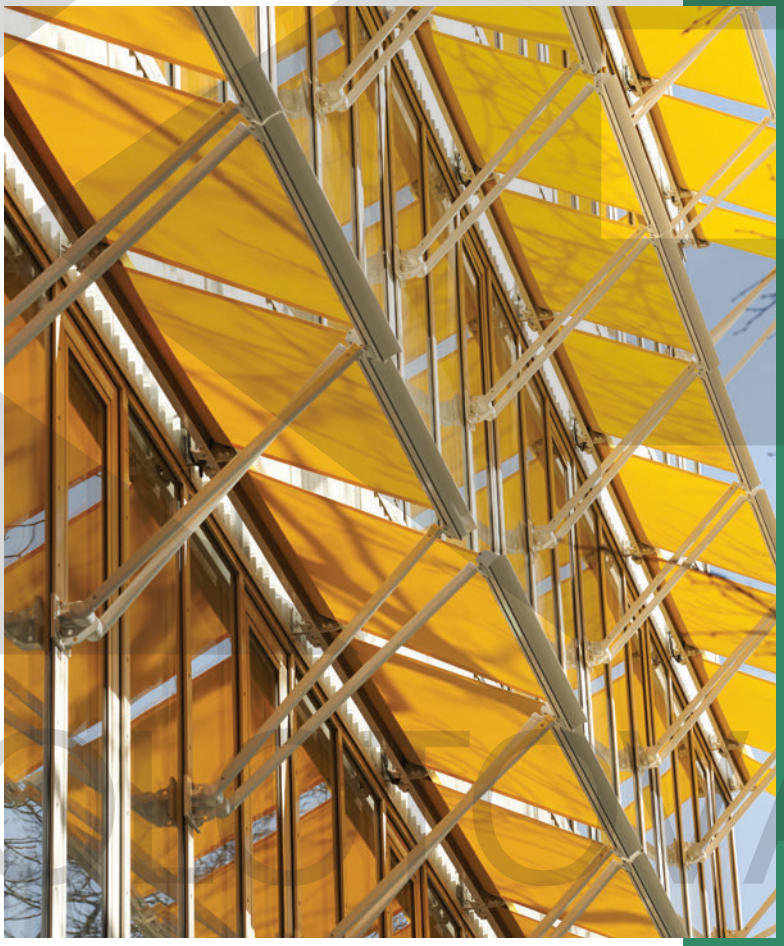

Residential Complex

Aosta, Italy

Automation of swing gates and garage doors.

KOVOPOLOTOVARY.CZ

Nice, we make the extraordinary ordinary

Our aim is to let people live in a world without barriers, that makes the Nice Group the ideal partner to implement all types of project: residential, commercial, hotels and other public spaces such as schools, hospitals and medical centres.

Unique solutions combining technology, innovation, quality and design, able to make even the smallest of gestures extraordinary.

Systems for the automation and control of gates, garage doors, road barriers, blinds, shutters, lighting and alarm systems are now integrated and can be managed by smart and intuitive interfaces: practical, functional and elegant solutions for an extraordinary way to live every space to its fullest potential.

Designers, architects, engineers and contractors can find in The Nice Group their privileged partner, which provides comprehensive support throughout the realisation of any project, from design to installation.

Nice means the simplest integration, the most elegant design and the most advanced electronics.

www.niceforyou.com

KOVOPLOTOVARY.CZ

Why Nice

Innovation

Nice is investing in innovation, experimenting pioneering technologies like the Mixed Reality, to simplify professionals' everyday work. Guided interactive procedures, virtual manipulation of objects and remote assistance simplify installation and maintenance.

KOVOBRICHEVARY.CZ

Safety

A wide range of accessories with a minimalist, modern and discrete design, featuring BlueBUS or all-wireless technology to guarantee the maximum safety in residential, industrial and public contexts.

Versatility

Nice Tag System, miniaturized transmitters and control units: disappearing inside the standard wall plates, they're ideal for restorations and upgrades of existing systems, to control home automations without the need to replace the existing system or performing masonry work.

KOVOPOLOTOVARY.CZ

Fewer worries and more safety with Yubii

Yubii is the new Nice ecosystem that lets automations communicate not only with each other, but also with you through bidirectional remote controls.

Yubii resolves your every doubt

The new remote controls provide you with information on the status of your automations by LEDs, sounds or slight vibrations, so you can know at any moment if the garage and gates are open or closed, or if the blinds and rolling shutters are raised or lowered.

Yubii keeps you informed

With the new remote controls, lights, sounds or vibrations let you know immediately if the automation has received your command correctly, so you don't need to get up and check for yourself.

Yubii helps you live better

Having your home under control at all times has never been easier and more convenient, because all the answers to your doubts are at your fingertips, or rather, in the bidirectional remote controls and the MyNice Welcome App.

Yubii.niceforyou.com

KOVOPOLOTOVARY.CZ

Yubii™

The new Nice bidirectional ecosystem

The new Nice bidirectional radio protocol gives you two-way communication between the transmitter and receiver.

The bidirectional (BD) transmitters will give your customers feedback on reception of the command and information on the status of garage, gate, blind, sun awning and rolling shutter automations by orange, green and red LEDs, together with sounds and slight vibrations.

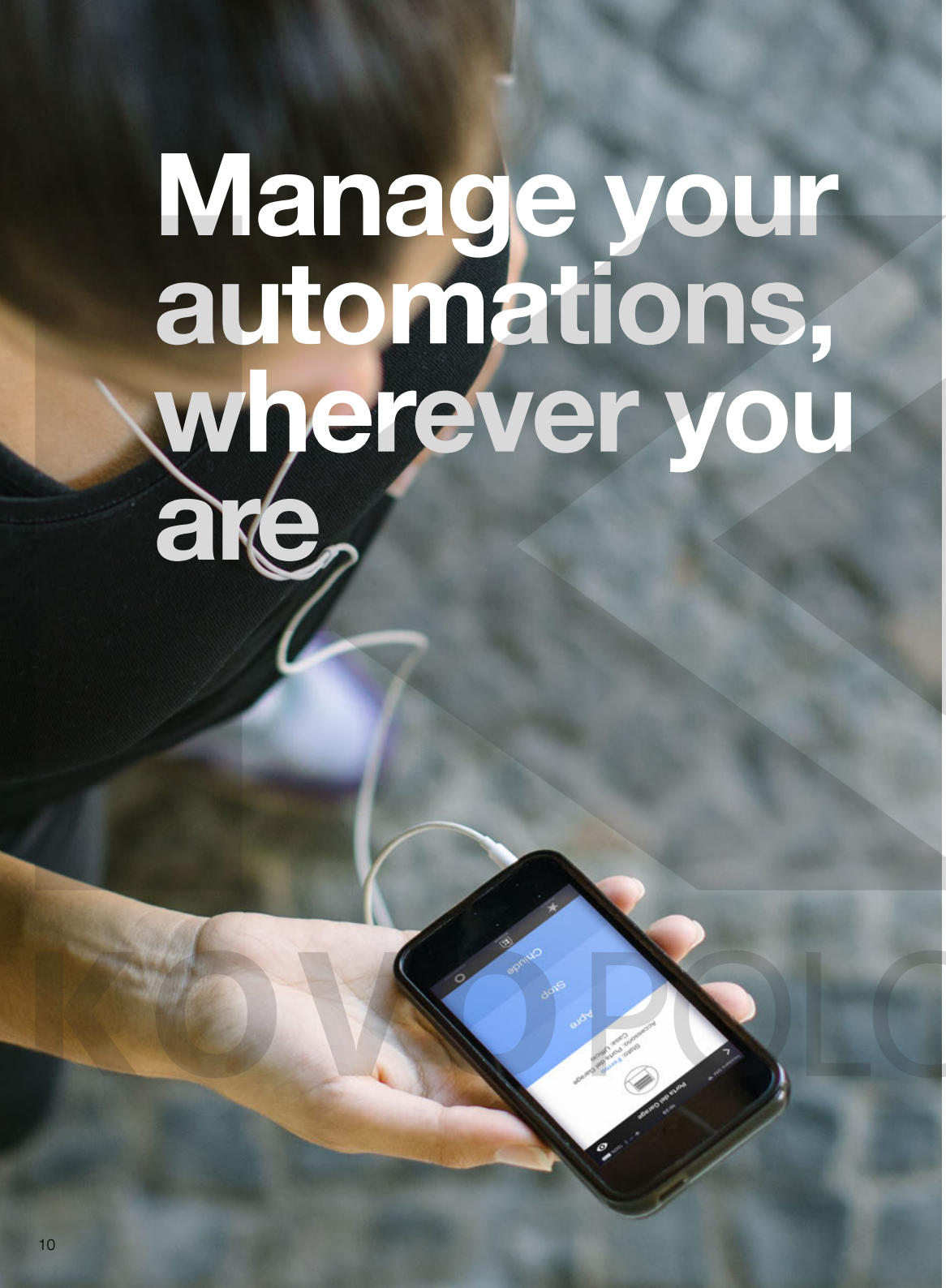

Manage your automations, wherever you are

The MyNice Welcome App lets you control the movement and status of your automations by smartphone, even remotely.

Nice makes your life easier because …

Through the small Core hub, you can manage all your automations, including blinds, awnings, rolling shutters, garage doors, gates, lights, and make them interact, creating **personalised scenarios** and setting actions for set times and days.

Thanks to integration between the **MyNice sensors** and the **Core** interface, you can also receive notifications on your smartphone and **keep up-to-date on what is happening at home**. For example, if the sensors detect the risk of flooding or the start of a fire, the water or electricity supply will be shut off immediately.

On page 172 you can find all information on Core and the MyNice Welcome App.

The MyNice Welcome App also lets you control Nice automations for gates and garage doors through the IT4WiFi interface.

The IT4WiFi is compatible with the HomeKit, so you can also control your garage door through **Apple's Home App** and create personalised scenarios with the other HomeKit devices connected, exploiting the **geolocation** functions and **voice commands via Siri**.

Find out all about the IT4WiFi on page 174.

Application of the Works with Apple HomeKit logo indicates that the electronic accessory in question has been designed specifically to connect with the iPod touch, iPhone or iPad respectively and that the developer certifies its compliance with the performance standards defined by Apple. Apple is not liable for functioning of the device or its compliance with legal and safety standards.

KOVOPOLOTOVARY.CZ

Hi-Speed, faster than ever

High-speed 24 V motors for the automation of sliding and swing gates and garage doors.

The perfect answer where rapid manoeuvres are required, ensuring the shortest standing time and the maximum safety.
A complete range responding to all installation needs.

Thanks to the advanced control units and the sensors for sensitive edges making the obstacle detection technology even more precise, **Hi-Speed systems are synonym to reliability, security and comfort.**

OTOVARY.CZ

Nice Centre R&D and labs

Nice is always on the lookout for innovative solutions which don't exist. Yet.

Nice has made significant investments to guarantee maximum quality standards, going beyond mere compliance with directives and regulations, to focus on continuous product improvement through high-tech procedures and experimentation, together with an innovative approach to open integration.

Every day in our laboratories we test our products painstakingly and precisely using cutting-edge technical procedures and the most innovative instruments in order to guarantee safety, quality, reliability and durability over time.

The Nice quality system complies with the internationally recognised ISO 9001, standard, while our laboratory conforms to the strict quality requirements of EN 17025 for test laboratories.

Nice CE certified products comply with European Directives and the leading internationally recognized standards.
Nice laboratories have been certified by outside certification bodies, attesting to their technical expertise and conformity to carry out testing to meet the needs of the numerous products manufactured by the Nice group:

- LCIE (France)
- IMQ (Italy)
- CTC Advanced (Germany)
- Intertek (Sweden)
- UL (USA)

KOVO POLOTOVARY.CZ

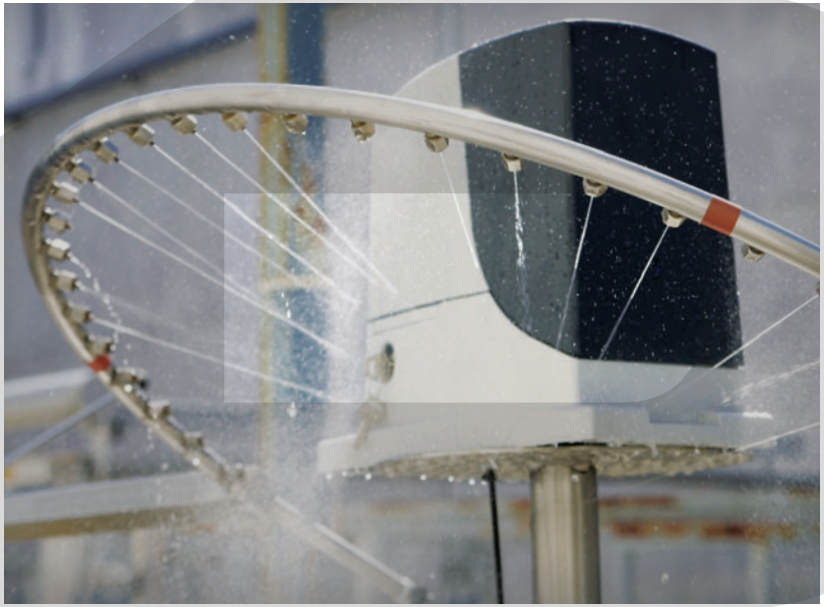

Guarantee

Nice control devices and automations for gates, garage doors, industrial doors and barriers are controlled and tested to give you a long-term guarantee: 3 years from the production date indicated on each product.

KOVOBOTOVARY.CZ

Better service, closer to you

Nice provides you, the professional, with a complete range of solutions designed to enhance your offer to the customer and to simplify installation and programming of all automation systems, from the simplest to the most sophisticated.

Technology, reliability and service.

Tools

Nice presents the **Pro-View**, the new programming tool that **simplifies configuration and maintenance** and **lets you programme the automations remotely**.

KOVOPOLOTOVARY.CZ

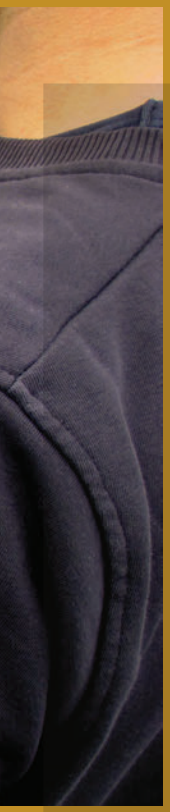

Training

Nice offers a packed programme of **training courses on products, sales techniques, installation and programming**, to provide a complete professional training.

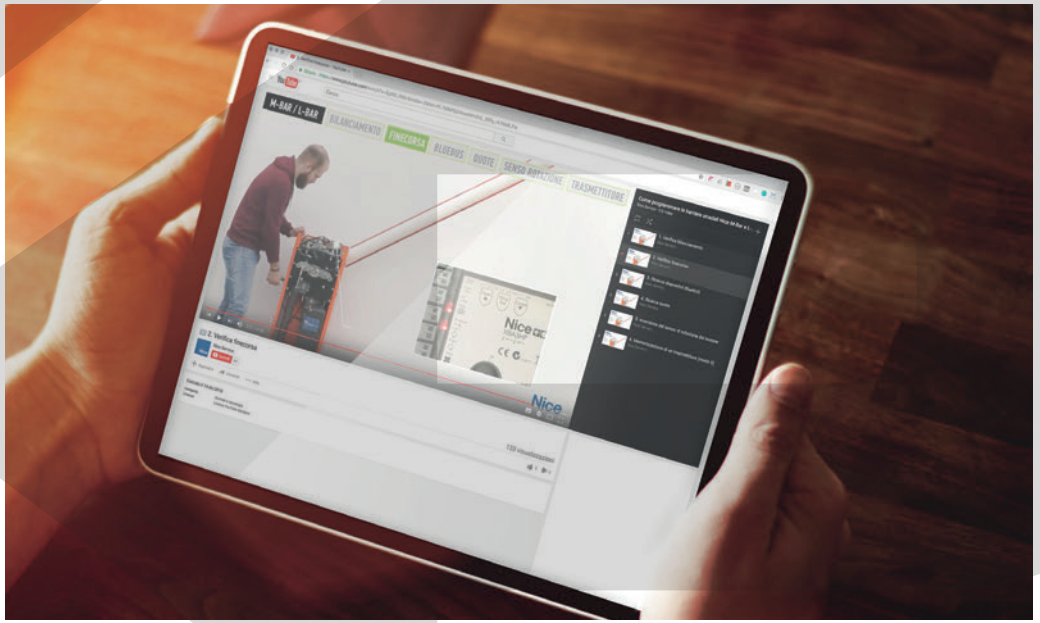

After-sales service

Nice guarantees **efficient and prompt service, even online, on the Niceforyou.com website**, with contents dedicated both to the professional and to the end user.

- Section dedicated to **installation and programming tutorial videos**, with the **answers to the most frequently asked questions**.
- Section where you can **download instruction manuals, quick guides, catalogues** and **brochures**.
- A form you can use to ask for the **updated software or firmware** of any programmer or control unit.

KOVOPOLOTOVARY.CZ

KOVOVLOVOVY.CZ

Guide to reading the catalogue

1. If you know the name of the product you can quickly find it out in the index on page 3;

2. If you know the part number but not the product name, go to pages 276/285 for the alphabetical list of part numbers;

3. If you don't know the product name or part number, look up the desired application in the index; the first few pages in each section feature a **simple selection guide** that helps identify the model of motor with the most suitable characteristics for your automation needs.

Surface mounted, with articulated arm, recommended for small posts, in kit with bidirectional technology

or leaves up to 1.8 m, 24 Vdc irreversible with built-in control unit equipped with BlueBUS technology, compatible for operation with Solemyo and Opera. Mechanical limit switch on closing.
Walkykit BD
pages 62/65

- for 1-leaf → **WALKY1024BDKCE**
- for 2-leaf → **WALKY2024BDKCE**

If you are looking to customise your automation system, refer to the **installation diagrams** on pages 256/271 and to the **compatibility table** on pages 272/275 to choose the most suitable electronics for each motor.

KOVOPOLOTOVARY.CZ

VO POLOTOVARY.CZ

Hi-Speed systems

For swing gates, sliding gates and garage doors

For swing gates, surface mounted

20. Toona HS
22. Wingo HS
24. Titan HS

For swing gates, surface mounted, with articulated arm

26. Hyke HS

For swing gates, underground installation

28. M-Fab HS
30. L-Fab HS

For residential and industrial sliding gates

32. Robus HS
34. Run HS

For garage doors

36. Spykit 650 HS BD

KOVOPOLOTOVARY.CZ

Nice

BiDi | Yubii | SOLEMYO | OPERA | BLUEBUS | 24V

Toona HS

For rapid operation of swing gates with leafs of **up to 5 m or 400 kg** (TO5024HS) **and up to 6 m or 1450 Kg** (TO6024HS)

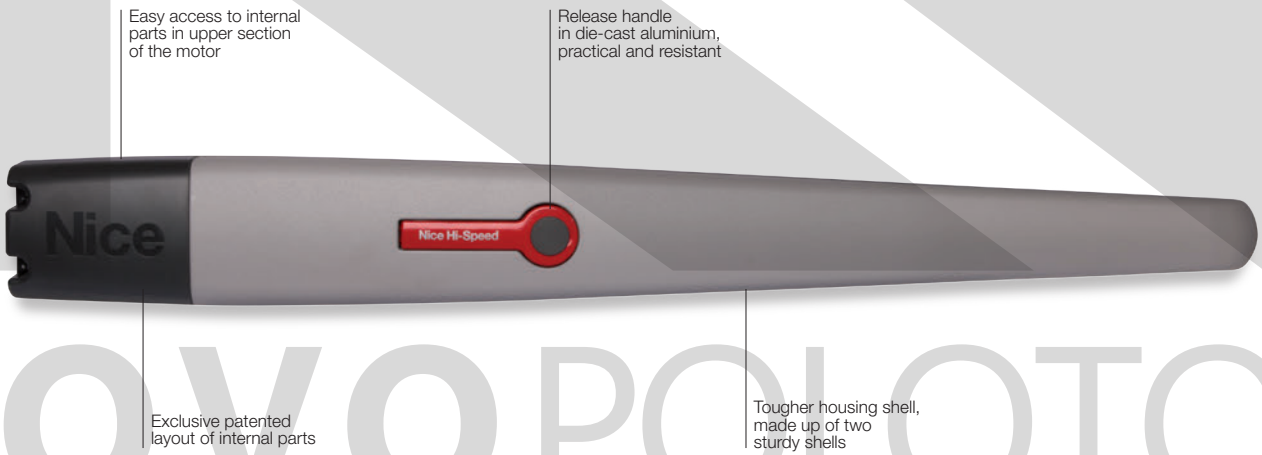

Ideal for residential and industrial applications.

24 Vdc, electromechanical gear motor, surface mounted, with magnetic encoder.

Quick manoeuvres: 90° opening in about 16* seconds with TO5024HS and about 30* seconds with TO6024HS.

Reliable: the magnetic encoder ensures the safeguard of set values over time and precise obstacle detection.

Silent: patented layout of internal parts and lead nut in bronze.

Sturdy: thanks to the housing, made up of two tough aluminium shells with polyester paint finish; more resistant to atmospheric agents.

Internal moving parts completely in steel, light alloys and technopolymers.

Generously sized and practical connection compartment: rapid and easy access from above to internal parts located in the upper section of the motor.

Simple installation and maintenance: with built-in capacitor.

Wholly compatible with the Moby series: same dimensions and fixing brackets.

Moonclever MC824H control unit:

- simple programming, by means of a single key;
- automatic memorization of limit switches on opening and closing with self-learning function;
- automatic fault diagnostics;
- programming of pause time;
- pedestrian pass door;
- deceleration on opening and closing;
- obstacle detection with dual technology;
- operation in event of power failure by means of optional rechargeable batteries (PS324);
- provision for connection of latest generation resistive sensitive edges.

* Considering standard installation, excluding acceleration and deceleration.

Nice **BiDirectional products** indicate the status of the automations and confirm correct reception of the command.

Discover the complete range of BiDirectional products on page 176.

Yubii is the new Nice ecosystem that connects all the automations in the home.

Discover all the benefits of the Yubii system on page 170.

KOVOPOLOTOVARY.CZ

COMMON ACCESSORIES

CORE
Nice Wi-Fi-Radio Gateway.

Pc./Pack 1

IBT4N
Interface for connecting the O-View programming unit.

Pc./Pack 1

IT4WIFI
Smart Wi-fi interface to manage gates and garage doors by smartphone (*).

Pc./Pack 1

PS324
24 V battery with integrated battery charger.

Pc./Pack 1

PLA10
Vertical 12 V electric lock (required for gates longer than 3 m).

Pc./Pack 1

PLA11
Horizontal 12 V electric lock (required for gates longer than 3 m).

Pc./Pack 1

TS
Signboard.

Pc./Pack 1

SOLEMYO KIT
The solar power to automate gates, garage doors or barrier gates.

See page 229.

* Not compatible with the Solemyo kit and PS324

TECHNICAL SPECIFICATIONS

Code	Description	Pack/Pallet
TO5024HS	Irreversible, 24 Vdc, fast, with magnetic encoder, mechanical stop on opening and closing	20
TO6024HS	Irreversible, 24 Vdc, fast, with magnetic encoder, mechanical stop on opening and closing	20

Code	TO5024HS	TO6024HS
ELECTRICAL DATA		
Power supply (Vdc)	24	
Absorption (A)	5	
Power (W)	120	
PERFORMANCE DATA		
Speed (m/s)	>> 0,025 <<	>> 0,016 <<
Force (N)	1800	2200
Work cycle (cycles/hour)	95	41
DIMENSIONAL AND GENERAL DATA		
Protection level (IP)	44	
Working temp. (°C Min/Max)	-20 ÷ +50	
Dimensions (mm)	965x115x105 h	1200x128x150 h
Weight (kg)	7,5	15

UTILISATION LIMITS

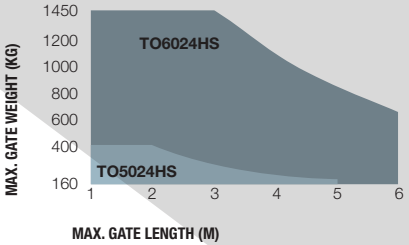

The shape, the height of the gate and the weather conditions can considerably reduce the values shown in the graph to the side.

Use in windy areas 230 Vac models.

DIMENSIONS

TO5024HS

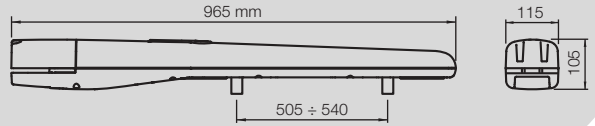

TO6024HS

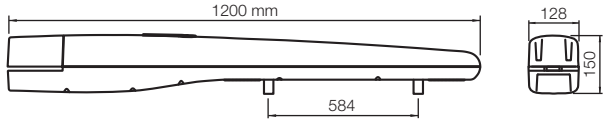

COMPATIBILITY TABLE WITH CONTROL SYSTEMS AND ACCESSORIES

	control unit/receiver							transmitter						photocells										flashing light		
Code	MC200 / Built-in*	MC800 / OXI / OXIBD / OXILR	DPRO500 / OXI / OXIBD / OXILR	DPRO924 / OXI / OXIBD / OXILR	MC424L / Built-in* / OXI / OXIBD / OXILR	MC824H / OXI / OXIBD / OXILR	MC824HR / OXI / OXIBD / OXILR	ERA INTI	ERA ONE	ERA ONE 8D	ERA ONE LR	ERA FLOR	NICEWAY	EPS	EPM	EPL	EPSB	EPMB	EPLB	EPMOW	F210	FT210	F210B	FT210B	ELAC	ELDC	WLT
TO5024HS						•		•	•	•	•	•	•				•	•	•	•			•		•	•
TO6024HS						•		•	•	•	•	•	•				•	•	•	•			•		•	•

* Radio receiver incompatible with Opera system

KOVOPOLOMOVARY.CZ

Nice

BiDi | Yubii | SOLEMYO | OPERA | BLUEBUS | 24V

Wingo HS

For hi-speed automation of swing gates with leaves up to 3 m or 200 Kg

Ideal for residential applications.

24 Vdc, electromechanical gear motor, surface mounted, with magnetic encoder.

Quick manoeuvres: 90° opening in about 10* seconds.

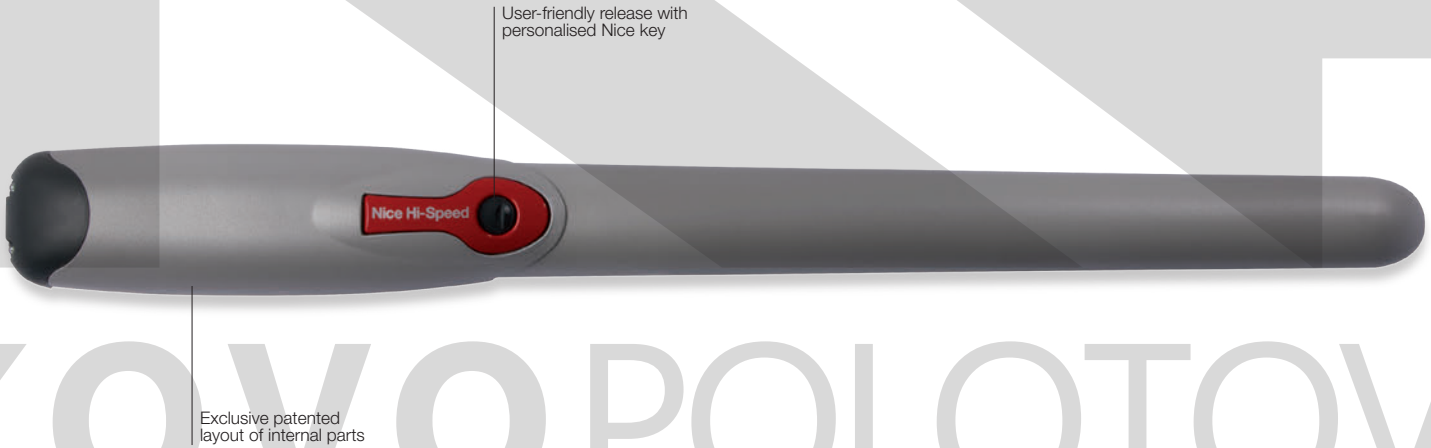

Reliable: the magnetic encoder ensures the safeguard of set values over time and precise obstacle detection.

Silent: patented layout of internal parts, fewer moving parts.

Easy to install: after the gear motor has been assembled, all electrical connections are made from above.

Pre-assembled travel stops on opening.

Moonclever MC824H control unit:

- simple programming, by means of a single key;
- automatic memorization of limit switches on opening and closing with self-learning function;
- automatic fault diagnostics;
- programming of pause time;
- pedestrian pass door;
- deceleration on opening and closing;
- obstacle detection with dual technology;
- operation in event of power failure by means of optional rechargeable batteries (PS324);
- provision for connection of latest generation resistive sensitive edges.

* Considering standard installation, excluding acceleration and deceleration.

Nice **BiDirectional products** indicate the status of the automations and confirm correct reception of the command.

Discover the complete range of BiDirectional products on page 176.

Yubii is the new Nice ecosystem that connects all the automations in the home.

Discover all the benefits of the Yubii system on page 170.

KOVO POLOTOVARY.CZ

COMMON ACCESSORIES

CORE
Nice Wi-Fi-Radio Gateway.

Pc./Pack 1

IBT4N
Interface for connecting the O-View programming unit.

Pc./Pack 1

IT4WIFI
Smart Wi-fi interface to manage gates and garage doors by smartphone (*).

Pc./Pack 1

PS324
24 V battery with integrated battery charger.

Pc./Pack 1

PLA14
Screw-adjustable rear bracket.

Pc./Pack 2

PLA15
Screw-adjustable front bracket.

Pc./Pack 2

PLA10
Vertical 12 V electric lock.

Pc./Pack 1

PLA11
Horizontal 12 V electric lock.

Pc./Pack 1

SOLEMYO KIT
The solar power to automate gates, garage doors or barrier gates.

See page 229.

* Not compatible with the Solemyo kit and PS324

TECHNICAL SPECIFICATIONS

Code	Description	Pack/Pallet
WG3524HS	Irreversible, 24 Vdc, fast, with magnetic encoder, mechanical stop on opening and closing	20

Code	WG3524HS
ELECTRICAL DATA	
Power supply (Vdc)	24
Absorption (A)	5
Power (W)	120
PERFORMANCE DATA	
Speed (m/s)	>> 0,04 <<
Force (N)	1500
Work cycle (cycles/hour)	30
DIMENSIONAL AND GENERAL DATA	
Protection level (IP)	44
Working temp. (°C Min/Max)	-20 ÷ +50
Dimensions (mm)	920x98x95 h
Weight (kg)	6

UTILISATION LIMITS

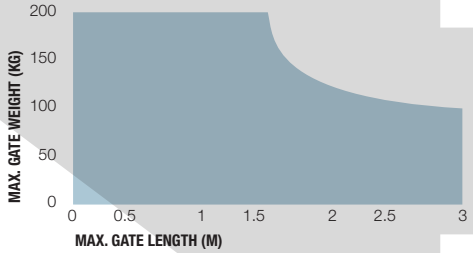

DIMENSIONS

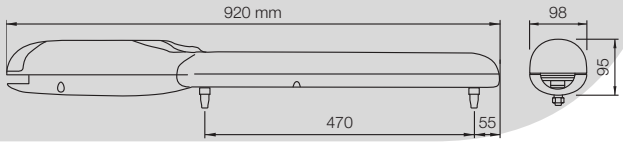

COMPATIBILITY TABLE WITH CONTROL SYSTEMS AND ACCESSORIES

	control unit/receiver							transmitter						photocells										flashing light		
Code	MC200 / Built-in*	MC800 / OXI / OXIBD / OXILR	DPRO500 / OXI / OXIBD / OXILR	DPRO924 / OXI / OXIBD / OXILR	MC424L / Built-in* / OXI / OXIBD / OXILR	MC824H / OXI / OXIBD / OXILR	MC824HR / OXI / OXIBD / OXILR	ERA INTI	ERA ONE	ERA ONE 8D	ERA ONE LR	ERA FLOR	NICEWAY	EPS	EPM	EPL	EPSB	EPMB	EPLB	EPMOW	P210	FT210	P210B	FT210B	ELAC	ELDC	WLT
WG3524HS						•		•	•	•	•	•	•				•	•	•	•		•		•	•	•

* Radio receiver incompatible with Opera system

KOVOPOLOTOVARY.CZ

Nice

BiDi | Yubii | SOLEMYO | OPERA | BLUEBUS | 24V

Titan HS

For rapid operation of swing gates with leafs **of up to 3.7 m** (TTN3724HS, TTN3724RHS)**, 6 m** (TTN6024HS, TTN6024RHS) **or 450 Kg**

24 Vdc, electromechanical gear motor, surface mounted, with magnetic encoder.

Quick manoeuvres: 90° opening in about 12* seconds with TTN3724HS and TTN3724RHS or 19* seconds with TTN6024HS and TTN6024RHS.

Reliable: the magnetic encoder ensures the safeguard of set values over time and precise obstacle detection.

Easy to install: electrical connections easily accessible from above, thanks to the dedicated access. Fixing brackets are supplied with the motor.

Versatile: the motor can also be installed in the bottom part of the gate leaf, at a distance of at least 110 mm from the ground.

Practical and safe: easy convenient key release located in the top part of the motor, allowing the gate leaves to be opened and closed manually in the event of a blackout.

Models TTN3724HS and TTN6024HS are compatible with the Moonclever MC824H control unit, while models TTN3724RHS and TTN6024RHS are compatible with the MC824HR control unit **:

- simple programming, by means of a single key;
- automatic memorization of limit switches on opening and closing with self-learning function;
- automatic fault diagnostics;
- programming of pause time;
- pedestrian pass door;
- deceleration on opening and closing;
- obstacle detection with dual technology;
- operation in event of power failure by means of optional rechargeable batteries (PS324);
- provision for connection of latest generation resistive sensitive edges.

* Considering standard installation, excluding acceleration and deceleration.

** Not compatible with the Solemyo solar power kit.

Nice **BiDirectional products** indicate the status of the automations and confirm correct reception of the command.

Discover the complete range of BiDirectional products on page 176.

Yubii is the new Nice ecosystem that connects all the automations in the home.

Discover all the benefits of the Yubii system on page 170.

KOVOPOLOTOVARY.CZ

COMMON ACCESSORIES

CORE
Nice Wi-Fi-Radio Gateway.

Pc./Pack 1

IBT4N
Interface for connecting the O-View programming unit.

Pc./Pack 1

IT4WIFI
Smart Wi-fi interface to manage gates and garage doors by smartphone (*).

Pc./Pack 1

PS324
24 V battery with integrated battery charger.

Pc./Pack 1

PLA10
Vertical 12 V electric lock (required for gates longer than 3 m).

Pc./Pack 1

PLA11
Horizontal 12 V electric lock (required for gates longer than 3 m).

Pc./Pack 1

TS
Signboard.

Pc./Pack 1

SOLEMYO KIT
The solar power to automate gates, garage doors or barrier gates (not compatible with the MC824HR control unit).

See page 229.

* Not compatible with the Solemyo kit and PS324

TECHNICAL SPECIFICATIONS

Code	Description	Pack/Pallet
TTN3724HS	Non-reversible, 24 Vdc, fast, with magnetic encoder, for swing gates with leafs of up to 3.7 m or 450 kg	32
TTN3724RHS	Reversible, 24 Vdc, fast, with magnetic encoder, for swing gates with leafs of up to 3.7 m or 450 kg	32
TTN6024HS	Non-reversible, 24 Vdc, fast, with magnetic encoder, for swing gates with leaves of up to 6 m or 450 kg	32
TTN6024RHS	Reversible, 24 Vdc, fast, with magnetic encoder, for swing gates with leaves of up to 6 m or 450 kg	32

Code	TTN3724HS	TTN6024HS	TTN3724RHS	TTN6024RHS
ELECTRICAL DATA				
Power supply (Vdc)	24			
Absorption (A)	6	7	6	7
Power (W)	150		170	
PERFORMANCE DATA				
Speed (m/s)	>> 0,032 <<	>> 0,027 <<	>> 0,032 <<	>> 0,027 <<
Force (N)	1900			
Work cycle (cycles/hour)	continuous cycle			
DIMENSIONAL AND GENERAL DATA				
Protection level (IP)	54			
Working temp. (°C Min/Max)	-20 ÷ +55			
Dimensions (mm)	910x105x170 h	1080x105x170 h	910x105x170 h	1080x105x170 h
Weight (kg)	8	9	8	9
L max / L min / travel (mm)	1370 / 860 / 510	1710 / 1030 / 680	1370 / 860 / 510	1710 / 1030 / 680
WxH (mm)	105x170			

UTILISATION LIMITS

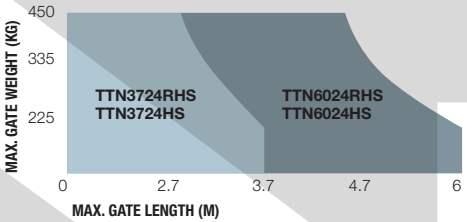

The shape, the height of the gate and the weather conditions can considerably reduce the values shown in the graph to the side.

DIMENSIONS

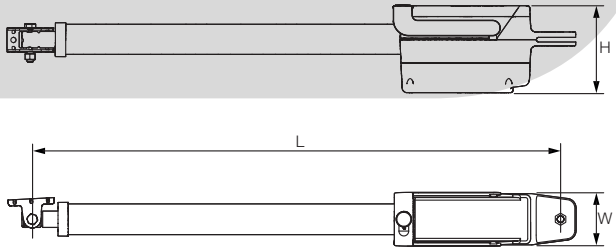

COMPATIBILITY TABLE WITH CONTROL SYSTEMS AND ACCESSORIES

	control unit/receiver							transmitter						photocells										flashing light		
Code	MC200 / Built-in*	MC800 / OXI / OXIBD / OXILR	DPR0500 / OXI / OXIBD / OXILR	DPR0924 / OXI / OXIBD / OXILR	MC424L / Built-in* / OXI / OXIBD / OXILR	MC824H / OXI / OXIBD / OXILR	MC824HR / OXI / OXIBD / OXILR	ERA INTI	ERA ONE	ERA ONE BD	ERA ONE LR	ERA FLOR	NICEWAY	EPS	EPM	EPL	EPSB	EPMB	EPLB	EPMOW	F210	FT210	F210B	FT210B	ELAC	ELDC	WLT
TTN3724HS						•		•	•	•	•	•	•				•	•	•	•			•			•	•
TTN3724RHS							•	•	•	•	•	•	•				•	•	•	•			•			•	•
TTN6024HS						•		•	•	•	•	•	•				•	•	•	•			•			•	•
TTN6024RHS							•	•	•	•	•	•	•				•	•	•	•			•			•	•

* Radio receiver incompatible with Opera system

KOVOPOLOTOVARY.CZ

Nice

BiDi | Yubii | SOLEMYO | OPERA | BLUEBUS | 24V

Hyke HS

For hi-speed automation of swing gates with leaves up to 3 m or 270 Kg

Ideal for residential applications even with large columns.

24 Vdc electromechanical gear motor with articulated arm, surface mounted, with magnetic encoder.

Ideal for intensive use and quick manoeuvres: 90° opening in about 10* seconds.

Ultra-powerful and reliable: thanks to the torque of 500 Nm and encoder technology, for millimetric precision and reliability.

Safe movement: dual technology obstacle detection.

Sturdy: thanks to the housing in aluminium with polyester paint finish, resistant to atmospheric agents.

Two irreversible 24 Vdc versions with limit switches on opening and closing: with built-in control unit (HK7024) and without control unit (HK7224).

Practical and quick installation: the articulated arm is adjustable in length for maximum flexibility.

Simple and precise limit switch adjustment: mechanical stops and micrometric adjustment screws.

No black out: with the optional batteries (PS124) housed inside the gear motor.

Built-in control unit (HK7024):

- simple programming, by means of a single key;
- automatic memorization of limit switches on opening and closing with self-learning function;
- automatic fault diagnostics;
- programming of pause time;
- pedestrian pass door;
- deceleration on opening and closing;
- obstacle detection with dual technology;
- provision for connection of latest generation resistive sensitive edges.

* Considering standard installation, excluding acceleration and deceleration.

Nice **BiDirectional products** indicate the status of the automations and confirm correct reception of the command.

Discover the complete range of BiDirectional products on page 176.

Yubii is the new Nice ecosystem that connects all the automations in the home.

Discover all the benefits of the Yubii system on page 170.

KOVOPOLOTOVARY.CZ

COMMON ACCESSORIES

CORE
Nice Wi-Fi-Radio Gateway.

Pc./Pack 1

IT4WIFI
Smart Wi-fi interface to manage gates and garage doors by smartphone (*).

Pc./Pack 1

HKA2
Spare control unit, for HK7024HS.

Pc./Pack 1

PS124
24 V battery with integrated battery charger.

Pc./Pack 1

PLA10
Vertical 12 V electric lock.

Pc./Pack 1

PLA11
Horizontal 12 V electric lock.

Pc./Pack 1

KIO
Key-operated selector switch for low voltage contacts, with release mechanism for metal cord.

Pc./Pack 1

KA1
6 m cable release kit for KIO.

Pc./Pack 1

TS
Signboard.

Pc./Pack 1

SOLEMYO KIT
The solar power to automate gates, garage doors or barrier gates.

See page 229.

* Not compatible with the Solemyo kit and PS124

TECHNICAL SPECIFICATIONS

Code	Description	Pack/Pallet
HK7024HS	Irreversible 24 Vdc, fast, with magnetic encoder, complete with articulated arm and built-in control unit	12
HK7224HS	Irreversible 24 Vdc, fast, complete with articulated arm without control unit	12

Code	HK7024HS	HK7224HS
ELECTRICAL DATA		
Power supply (Vac 50/60 Hz)	230	-
Power supply (Vdc)	-	24
Absorption (A)	1,5	6
Power (W)	300	140
PERFORMANCE DATA		
Speed (rpm)	>> 2 <<	
Torque (Nm)	500	
Work cycle (cycles/hour)	40	
DIMENSIONAL AND GENERAL DATA		
Protection level (IP)	54	
Working temp. (°C Min/Max)	-20 ÷ +50	
Dimensions (mm)	290x210x320 h	
Weight (kg)	10,5	9,5

UTILISATION LIMITS

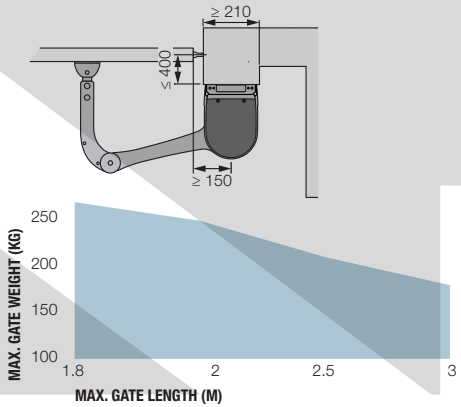

The shape, the height of the gate and the weather conditions can considerably reduce the values shown in the graph to the side.

DIMENSIONS

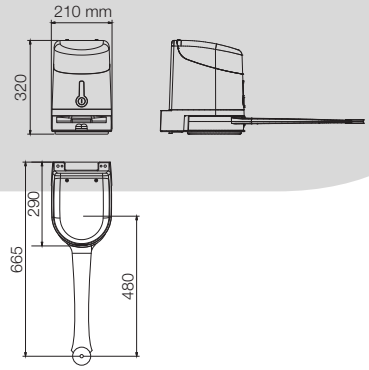

COMPATIBILITY TABLE WITH CONTROL SYSTEMS AND ACCESSORIES

	receiver				transmitter						photocells											flashing light		
Code	Built-in*	OXI	OXIBD	OXILR	ERA INTI	ERA ONE	ERA ONE BD	ERA ONE LR	ERA FLOR	NICEWAY	EPS	EPM	EPL	EPSB	EPMB	EPLB	EPMOW	F210	FT210	F210B	FT210B	ELAC	ELDC	WLT
HK7024HS		•	•	•	•	•	•	•	•	•				•	•	•	•			•			•	•

* Radio receiver incompatible with Opera system

KOVO POLOTOVARY.CZ

Nice

BiDi | Yubii | SOLEMYO | OPERA | BLUEBUS | 24V

M-Fab HS

For hi-speed automation of swing gates with leaves up to 3 m or 300 Kg

Underground installation, ideal for residential applications.

24 Vdc electromechanical gear motor, with magnetic encoder.

Ideal for intensive use and quick manoeuvres: 90° opening in about 8* seconds.

Foundation boxes externally chamfered, Fab Box with mechanical stop on opening:

- **in stainless steel** (MFABBOXI), ideal for use in extreme conditions;
- **with the cataphoresis paint finish** (MFABBOX), highly resistant to corrosion.

Reliable and resistant: motors made up of solid internal parts in metal. New IP67 waterproof die cast aluminium.

Total freedom of choice: release from inside and outside, two key-operated models or freely compatible lever version and easily activated with just one hand.

Simple installation: mechanical stop system on closure. Standard opening max. 110°, optional opening 360°.

Totally compatible with the previous Metro series.

Moonclever MC824H control unit:

- simple programming, by means of a single key;
- automatic memorization of limit switches on opening and closing with self-learning function;
- automatic fault diagnostics;
- programming of pause time;
- pedestrian pass door;
- deceleration on opening and closing;
- obstacle detection with dual technology;
- operation in event of power failure by means of optional rechargeable batteries (PS324);
- provision for connection of latest generation resistive sensitive edges.

* Considering standard installation, excluding acceleration and deceleration.

Nice **BiDirectional products** indicate the status of the automations and confirm correct reception of the command.

Discover the complete range of BiDirectional products on page 176.

Yubii is the new Nice ecosystem that connects all the automations in the home.

Discover all the benefits of the Yubii system on page 170.

KOVOPOLOTOVARY.CZ

COMMON ACCESSORIES

CORE
Nice Wi-Fi-Radio Gateway.

Pc./Pack 1

IT4WIFI
Smart Wi-fi interface to manage gates and garage doors by smartphone (*).

Pc./Pack 1

PS324
24 V battery with integrated battery charger.

Pc./Pack 1

MEA2
Key unlock system.

Pc./Pack 1

MEA3
Lever-type key unlock system to use when system is installed on surfaces such as sand or earth.

Pc./Pack 1

MEA5
Lever-type unlock key.

Pc./Pack 4

MEA6
Limit switch bracket, for installations where box embedding in concrete is not possible.

Pc./Pack 4

MEA1
Accessory for opening up to 360° for gates max. 2.5 m in length.

Pc./Pack 4

PLA10
Vertical 12 V electric lock.

Pc./Pack 1

PLA11
Horizontal 12 V electric lock.

Pc./Pack 1

TS
Signboard.

Pc./Pack 1

SOLEMYO KIT
The solar power to automate gates, garage doors or barrier gates.

See page 229.

* Not compatible with the Solemyo kit and PS324

TECHNICAL SPECIFICATIONS

Code	Description	Pack/Pallet
MFAB3024HS	Irreversible 24 Vdc, fast, with magnetic encoder, complete with connecting lever and mechanical stop for the closing manoeuvre	18

Code	Description	Pack/Pallet
MFABBOXI	Externally chamfered foundation box in stainless steel with mechanical stop on opening	20
MFABBOX	Externally chamfered foundation box with cataphoresis finish with mechanical stop on opening	20

Note: key release mechanism, freely compatible with selection of models MEA2 and MEA3 motor.

Code	MFAB3024HS
ELECTRICAL DATA	
Power supply (Vdc)	24
Absorption (A)	6
Power (W)	170
PERFORMANCE DATA	
Speed (rpm)	>> 2,6 <<
Torque (Nm)	180
Work cycle (cycles/hour)	80
DIMENSIONAL AND GENERAL DATA	
Protection level (IP)	67
Working temp. (°C Min/Max)	-20 ÷ +50
Dimensions (mm)	390x322x194 h
Weight (kg)	11

UTILISATION LIMITS

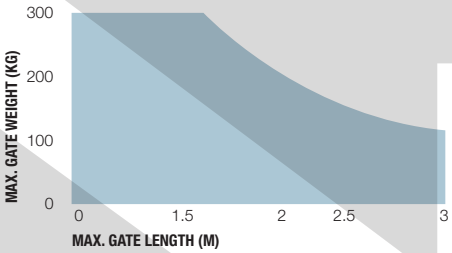

The shape, the height of the gate and the weather conditions can considerably reduce the values shown in the graph to the side.

DIMENSIONS

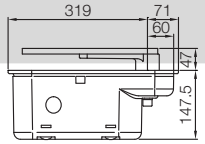

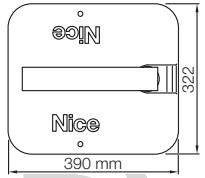

COMPATIBILITY TABLE WITH CONTROL SYSTEMS AND ACCESSORIES

	control unit/receiver							transmitter						photocells							flashing light		
Code	MC200 / Built-in*	MC800 / OXI / OXIBD / OXILR	DPR0500 / OXI / OXIBD / OXILR	DPR0924 / OXI / OXIBD / OXILR	MC424L / Built-in* / OXI / OXIBD / OXILR	MC824H / OXI / OXIBD / OXILR	MC824HR / OXI / OXIBD / OXILR	ERA INTI	ERA ONE	ERA ONE BD	ERA ONE LR	ERA FLOR	NICEWAY	EPS	EPM	EPL	EPSB	EPMB	EPLB	EPMOW	F210	FT210	F210B	FT210B	ELAC	ELDC	WLT
MFAB3024HS						•		•	•	•	•	•	•				•	•	•	•			•			•	•

* Radio receiver incompatible with Opera system

KOVOPOLOTOVARY.CZ

Nice

BiDi | Yubii | SOLEMYO | OPERA | BLUEBUS | 24V

L-Fab HS

For hi-speed automation of swing gates with leaves up to 4 m or 400 Kg

Underground installation.

24 Vdc electromechanical gearmotor with magnetic encoder and mechanical stops.

Ideal for intensive use and quick manoeuvres: 90° opening in about 6* seconds.

Foundation boxes with mechanical stop on opening:

- **in stainless steel** (LFABBOX4I), ideal for use in extreme conditions;
- **with the cataphoresis paint finish** (LFABBOX4), highly resistant to corrosion.

Total freedom of choice: release from inside or outside, lever operated models, freely combinable and easy to operate with just one hand.

Simple installation: mechanical stop system on closure. Standard opening max. 110°, optional opening 360°.

Ideal for intensive use, LFAB4024HS model is compatible with the control unit Moonclever MC824H, with BlueBUS technology, Solemyo and Opera systems:

- simple programming, by means of a single key;
- automatic memorization of limit switches on opening and closing with self-learning function;
- automatic fault diagnostics;
- programming of pause time;
- pedestrian pass door;
- deceleration on opening and closing;
- obstacle detection with dual technology;
- operation in event of power failure by means of optional rechargeable batteries (PS324);
- provision for connection of latest generation resistive sensitive edges.

* Considering standard installation, excluding acceleration and deceleration.

Nice **BiDirectional products** indicate the status of the automations and confirm correct reception of the command.

Discover the complete range of BiDirectional products on page 176.

Yubii is the new Nice ecosystem that connects all the automations in the home.

Discover all the benefits of the Yubii system on page 170.

KOVOPOLOTOVARY.CZ

COMMON ACCESSORIES

CORE
Nice Wi-Fi-Radio Gateway.

Pc./Pack 1

IT4WIFI
Smart Wi-fi interface to manage gates and garage doors by smartphone (*).

Pc./Pack 1

PS324
24 V battery with integrated battery charger.

Pc./Pack 1

BMA3
Lever-type key unlock system.

Pc./Pack 1

MEA5
Lever-type unlock key.

Pc./Pack 4

BMA1
Accessory for opening up to 360° for gates max. 3.5 m in length.

Pc./Pack 1

PLA10
Vertical 12 V electric lock (required for gates longer than 3 m).

Pc./Pack 1

PLA11
Horizontal 12 V electric lock (required for gates longer than 3 m).

Pc./Pack 1

TS
Signboard.

Pc./Pack 1

SOLEMYO KIT
The solar power to automate gates, garage doors or barrier gates.

See page 229.

* Not compatible with the Solemyo kit and PS324

TECHNICAL SPECIFICATIONS

Code	Description	Pack/Pallet
LFAB4024HS	Non-reversible, 24 Vdc, fast, with magnetic encoder and mechanical limit switch in closing	18

Code	Description	Pack/Pallet
LFABB0X4	Foundation box with cataphoresis paint finish for LFAB4000, LFAB4024, LFAB4024HS with built-in mechanical stop on opening. Complete with leaf coupling lever	18
LFABB0X4I	Stainless steel foundation box for LFAB4000, LFAB4024, LFAB4024HS with built-in mechanical stop on opening. Complete with leaf coupling lever	18

Code	**LFAB4024HS**
ELECTRICAL DATA	
Power supply (Vdc)	24
Absorption (A)	7
Power (W)	170
PERFORMANCE DATA	
Speed (rpm)	>> 3 <<
Torque (Nm)	200
Work cycle (cycles/hour)	50**
DIMENSIONAL AND GENERAL DATA	
Protection level (IP)	67
Working temp. (°C Min/Max)	-20 ÷ +55
Dimensions (mm)	375x225x110 h*
Weight (kg)	12,5

Code	**LFABB0X4**
Weight (kg)	14,4

* With foundation box. ** The indicated value has to be halved if the opening is up to 180° - by using the BMA1 accessory.

UTILISATION LIMITS

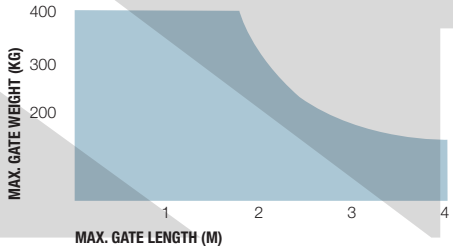

The shape, the height of the gate and the weather conditions can considerably reduce the values shown in the graph to the side.

DIMENSIONS

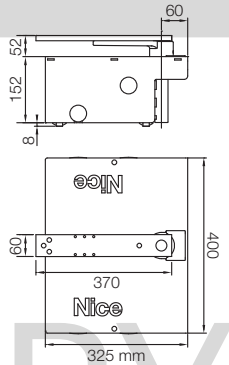

COMPATIBILITY TABLE WITH CONTROL SYSTEMS AND ACCESSORIES

	control unit/receiver							transmitter						photocells									flashing light		
Code	MC200 / Built-in*	MC800 / OXI / OXIBD / OXILR	DPR0500 / OXI / OXIBD / OXILR	DPR0924 / OXI / OXIBD / OXILR	MC424L / Built-in* / OXI / OXIBD / OXILR	MC824H / OXI / OXIBD / OXILR	MC824HR / OXI / OXIBD / OXILR	ERA INTI	ERA ONE	ERA ONE BD	ERA ONE LR	ERA FLOR	NICEWAY	EPS	EPM	EPL	EPSB	EPMB	EPLB	EPMOW	F210	FT210	F210B	FT210B	ELAC	ELDC	WLT
LFAB4024HS						•		•	•	•	•	•	•				•	•	•	•			•			•	•

* Radio receiver incompatible with Opera system

KOVOPOLOTOVARY.CZ

Nice

BiDi | Yubii | SOLEMYO | OPERA | BLUEBUS | 24V

Robus HS

For hi-speed automation of sliding gates weighing **up to 250 Kg** (RB250HS) **and up to 500 kg** (RB500HS)

For residential and industrial applications.

24 Vdc electromechanical gear motor.

Ideal for intensive use: opening a 4 m gate takes around 10* seconds with RB250HS and around 9* seconds with RB500HS.

User-friendly: thanks to the Nice BlueBUS technology, the control unit can be connected to up to 7 couples of photocells, control, security and signalling devices, using two wires only.

Practical: control unit and buffer batteries PS124 (optional) connected by practical guided plug-in connector, housed in the gearmotor.

Advanced: the temperature sensor adapts the motor power to the climatic conditions and at the same time thermal cut-out; a master/slave selection automatically synchronises two motors. This means it is possible to automate 2-leaf sliding gates set opposite each other.

A master/slave selection automatically synchronises two motors. This means it is possible to automate 2-leaf sliding gates set opposite each other.

Intelligent: thanks to the obstacle detection system and automatic programming of the working times. Self-diagnosis by means of a flashing light. 8 programming levels.

Safe: acceleration and deceleration can be adjusted at the beginning and at the end of each opening and closing manoeuvre.

Sturdy: base and release in pressure die cast with easy to open handle.

Silent: gear motor on bearings.

* Considering standard installation, excluding acceleration and deceleration.

Nice **BiDirectional products** indicate the status of the automations and confirm correct reception of the command.

Discover the complete range of BiDirectional products on page 176.

Yubii is the new Nice ecosystem that connects all the automations in the home.

Discover all the benefits of the Yubii system on page 170.

KOVOPOLOTOVARY.CZ

COMMON ACCESSORIES

CORE
Nice Wi-Fi-Radio Gateway.

Pc./Pack 1

IBT4N
Interface for connecting the O-View programming unit.

Pc./Pack 1

IT4WIFI
Smart Wi-fi interface to manage gates and garage doors by smartphone (*).

Pc./Pack 1

RBA3/HS
Spare control unit for RB250HS and RB500HS.

Pc./Pack 1

PS124
24 V battery with integrated battery charger.

Pc./Pack 1

RBA1
Inductive limit switch.

Pc./Pack 1

ROA6
M4 25x20x1000 mm slotted nylon rack with metal insert. For gates weighing up to 500 kg.

Pc./Pack 10

ROA7
M4 rack, zinc coated, 22x22x1000 mm.

Pc./Pack 10

ROA8
M4 rack, 30x8x1000 mm, zinc coated with spacers and screws.

Pc./Pack 10

TS
Signboard.

Pc./Pack 1

SOLEMYO KIT
The solar power to automate gates, garage doors or barrier gates.

See page 229.

* Not compatible with the Solemyo kit and PS124

TECHNICAL SPECIFICATIONS

Code	Description	Pack/Pallet
RB250HS	Irreversible, 24 Vdc, fast, with incorporated control unit, with electromechanical limit switch, for gates up to 250 kg	14
RB500HS	Irreversible, 24 Vdc, fast, with incorporated control unit, with electromechanical limit switch, for gates up to 500 kg	14

Code	RB250HS	RB500HS
ELECTRICAL DATA		
Power supply (Vac 50/60 Hz)	230	230
Absorption (A)	2,1	2,2
Power (W)	430	450
PERFORMANCE DATA		
Speed (m/s)	>> 0,4 <<	>> 0,44 <<
Force (N)	310	360
Work cycle (cycles/hour)	50	20
DIMENSIONAL AND GENERAL DATA		
Protection level (IP)	44	
Working temp. (°C Min/Max)	-20 ÷ +50	
Dimensions (mm)	330x195x277 h	330x210x303 h
Weight (kg)	8	11

DIMENSIONS

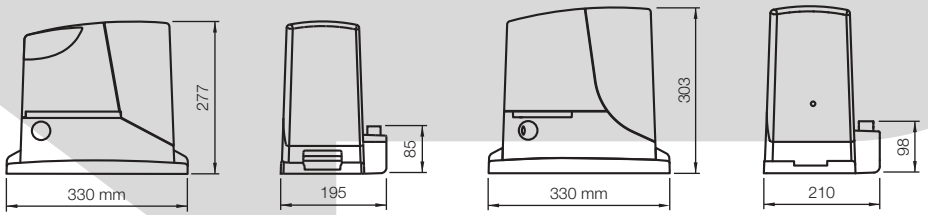

RB250 **RB500**

COMPATIBILITY TABLE WITH CONTROL SYSTEMS AND ACCESSORIES

	receiver				transmitter						photocells											flashing light		
Code	Built-in*	OXI	OXIBD	OXILR	ERA INTI	ERA ONE	ERA ONE BD	ERA ONE LR	ERA FLOR	NICEWAY	EPS	EPM	EPL	EPSB	EPMB	EPLB	EPMOW	EPMOR	F210	FT210	F210B	FT210B	ELAC	ELDC	WLT
RB250HS		•	•	•	•	•	•	•	•	•				•	•	•	•	•			•	•		•	•
RB500HS		•	•	•	•	•	•	•	•	•				•	•	•	•	•			•	•		•	•

* Radio receiver incompatible with Opera system

KOVOPLOTOVARY.CZ

Run HS

For hi-speed automation of sliding gates weighing **up to 400 Kg** (RUN400HS) **and up to 1200 kg** (RUN1200HS)

For residential and industrial applications.

24 Vdc electromechanical gear motor.

Rapid manoeuvres, with opening and closing: Opening a 4 m gate takes around 6* seconds with RUN400HS, while opening a 7 m gate takes around 18* seconds with RUN1200HS.

The fastest: ideal for industrial applications, designed for intensive use.

User-friendly: thanks to the Nice BlueBUS technology, the control unit can be connected to up to 7 couples of photocells, control, security and signalling devices, using two wires only.

Practical: the control unit and PS524 battery charger (to which two B12-B batteries should be added) can be connected by means of a simple connector and can be housed directly inside the motor.

Advanced: the temperature sensor adapts the motor power to the climatic conditions and at the same time thermal cut-out; a master/slave selection automatically synchronises two motors. This means it is possible to automate 2-leaf sliding gates set opposite each other.

Intelligent: thanks to the obstacle detection system and automatic programming of the working times. Self-diagnosis by means of a flashing light. 8 programming levels.

Safe: acceleration and deceleration can be adjusted at the beginning and at the end of each opening and closing manoeuvre.

Sturdy: base and release in pressure die cast with easy to open handle.

Silent: gear motor on bearings.

* Considering standard installation, excluding acceleration and deceleration.

Nice **BiDirectional products** indicate the status of the automations and confirm correct reception of the command.

Discover the complete range of BiDirectional products on page 176.

Yubii is the new Nice ecosystem that connects all the automations in the home.

Discover all the benefits of the Yubii system on page 170.

KOVOPOLOTOVARY.CZ

COMMON ACCESSORIES

CORE
Nice Wi-Fi-Radio Gateway.

Pc./Pack 1

IT4WIFI
Smart Wi-fi interface to manage gates and garage doors by smartphone (*).

Pc./Pack 1

RUA6
Spare control unit for RUN400HS and RUN1200HS.

Pc./Pack 1

B12-B
12 V, 6 Ah batteries.

Pc./Pack 1

PS524
Charge card for 7 Ah batteries.

Pc./Pack 1

RBA1
Inductive limit switch.

Pc./Pack 1

ROA7
M4 rack, zinc coated, 22x22x1000 mm.

Pc./Pack 10

ROA8
M4 rack, 30x8x1000 mm, zinc coated with spacers and screws.

Pc./Pack 10

ROA81
M6 rack, 30x30x1000 mm, zinc coated, to be coupled with RUA12.

Pc./Pack 10

RUA12
12-teeth pinion, module 6, to be coupled with rack ROA81. The Run automation is supplied with a module 4 pinion to be used with the standard racks ROA7 and ROA8.

Pc./Pack 1

TS
Signboard.

Pc./Pack 1

* Incompatible with PS524

TECHNICAL SPECIFICATIONS

Code	Description	Pack/Pallet
RUN400HS	Irreversible, 24 Vdc, fast, with incorporated control unit, with electromechanical limit switch, for gates up to 400 kg	12
RUN1200HS	Irreversible, 24 Vdc, fast, with incorporated control unit, with electromechanical limit switch, for gates up to 1200 kg	12

Code	RUN400HS	RUN1200HS
ELECTRICAL DATA		
Power supply (Vac 50/60 Hz)	230	
Absorption (A)	2	
Power (W)	415	
PERFORMANCE DATA		
Speed (m/s)	>> 0,7 <<	>> 0,37 <<
Force (N)	409	790
Work cycle (cycles/hour)	60	
DIMENSIONAL AND GENERAL DATA		
Protection level (IP)	44	
Working temp. (°C Min/Max)	-20 ÷ +50	
Dimensions (mm)	400x255x387 h	
Weight (kg)	24,5	

DIMENSIONS

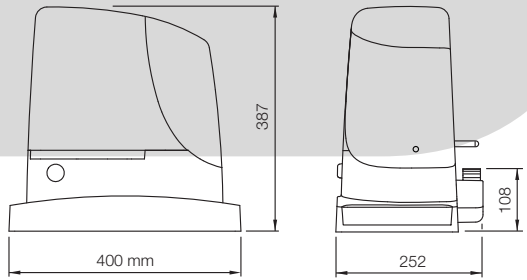

COMPATIBILITY TABLE WITH CONTROL SYSTEMS AND ACCESSORIES

	receiver			transmitter						photocells											flashing light		
Code	Built-in*	OXI	OXIBD	OXILR	ERA INTI	ERA ONE	ERA ONE BD	ERA ONE LR	ERA FLOR	NICEWAY	EPS	EPM	EPL	EPSB	EPMB	EPLB	EPMOW	EPMOR	P210	FT210	F210B	FT210B	ELAC	ELDC	WLT
RUN400HS		•	•	•	•	•	•	•	•	•				•	•	•	•	•			•	•		•	•
RUN1200HS		•	•	•	•	•	•	•	•	•				•	•	•	•	•			•	•		•	•

* Radio receiver incompatible with Opera system

KOVO POLOTOVARY.CZ

Nice

NEW | BiDi | Yubii | SOLEMYO | OPERA | BLUEBUS | 24V

Spykit 650 HS BD

For sectional doors up to 10.5 m² and up-and-over doors (projecting and non-projecting) up to 11.5 m²

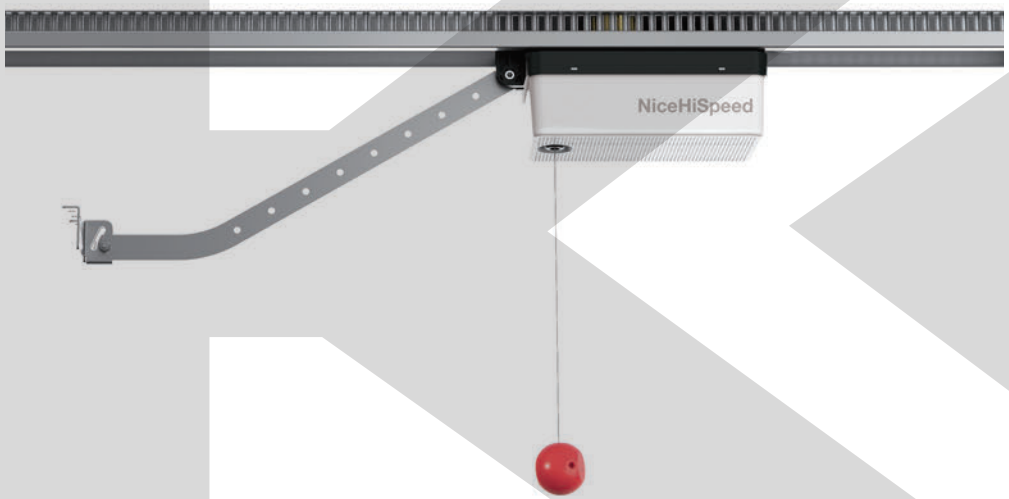

24 Vdc irreversible electromechanical gear motor for residential use, transmission with rack on the rail.

To be combined with SPYRAIL321, SPYRAIL162 and SPYRAIL081 rails.

Quick manoeuvres: the garage door opens in about 8,5* seconds

Functional and stylish: the motor is the only component that moves on the rail, there are no chains or other noisy mechanisms. Ideal for any architectural context.

Handy: Separate control unit: more practical and convenient for programming and maintenance. Built-in LED courtesy light. Three practical keys to control the automation.

Quick to install: modular rail with assembly accessories. Limit switches easy to position along the rail with no need to stand and work on the ceiling. No chains or other noisy mechanisms to install.

Simple to install with the BlueBus system: requiring just two wires for connection between the control unit and the pairs of photocells and other accessories featuring BlueBus technology.

Easy to program: simple and fast basic programming, using the Quick Setup procedure. Simplified advanced programming, using O-View.

ON/OFF release system: pulling the release knob once releases the motor; pulling it a second time blocks the motor again, in any position along the rail.

Inexpensive to run and environmentally-friendly: when connected to the mains in standby mode, the control unit consumes just 0.5 W. When connected to the battery or the Solemyo kit, power consumption in standby mode is reduced to 0.1 W.

No black out: operation is guaranteed even when mains power is not available, thanks to the optional PS324 backup battery.

Safe: obstacle detection, motor power monitoring during travel, diagnostic messages via flashing light and courtesy light.

Adjustable acceleration and deceleration at the start and end of each manoeuvre.

Ready for installation of the latest generation 8.2 kOhm resistive sensitive edges.

Optimised logistics: for practical management and transport, the rails are available in different sizes: single 3.2 m long rail, or supplied in two 1.6 m sectionsplus a 0.8 m extension.

* Considering a typical installation with a 2 m high garage door, excluding acceleration and deceleration.

Nice **BiDirectional products** indicate the status of the automations and confirm correct reception of the command.

Discover the complete range of BiDirectional products on page 176.

Yubii is the new Nice ecosystem that connects all the automations in the home.

Discover all the benefits of the Yubii system on page 170.

NEW

The kit contains:

SPY650HS
1 gearmotor, 650 N.

SPYBOXHS
1 Control unit with LED courtesy light and OXIBD bidirectional radio receiver with connector included.

ON3EBD
1 Transmitter 433.92 MHz, 3 channels, bidirectional

KOVOPOLOTOVARY.CZ

COMMON ACCESSORIES

CORE
Nice Wi-Fi-Radio Gateway.

Pc./Pack 1

SPYLIGHT
LED accessory module for Spyrail (max 2 per Spyrail).

Pc./Pack 1

IBT4N
Interface for connecting the O-View programming unit.

Pc./Pack 1

IT4WIFI
Smart Wi-fi interface to manage gates and garage doors by smartphone (*).

Pc./Pack 1

PS324
24 V battery with integrated battery charger. Requires accessory TNA9 for wall mounting.

Pc./Pack 1

TNA9
Additional connection cable and supports for wall-mounting of PS324 battery.

Pc./Pack 1

SPA5
Oscillating arm sliding on bearings with optimised structure for projecting up-and-over doors.

Pc./Pack 1

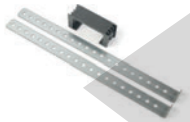

SPA10
Kit with additional ceiling fixing bracket for Spyrail.

Pc./Pack 1

SPA6
Large 585 mm long connecting arm.

Pc./Pack 1

KI1
Outside release kit with metal pull-cord and lock and key.

Pc./Pack 1

SPA2
Kit for unlocking from the outside with cable.

Pc./Pack 1

TS
Signboard.

Pc./Pack 1

SOLEMYO KIT
The solar power to automate gates, garage doors or barrier gates. See page 229.

* Not compatible with the Solemyo kit and PS324

TECHNICAL SPECIFICATIONS

Code	Description	Pack/Pallet
SPY650HSBDKCE	Kit to automate sectional and up-and-over doors, 650 N, with SPYBOXHS control unit, OXIBD receiver with connector included, 1 ON3EBD transmitter included. Guides not included	48

Code	SPY650HSBDKCE
ELECTRICAL DATA	
Power supply (Vac 50/60 Hz)	230 ± 10%
Absorption (A)	1,6
Maximum power (W)	300
Power in standby (W)	0,5
PERFORMANCE DATA	
Maximum speed (m/s)	>> 0,24 <<
Maximum force (N)	650
Nominal force (N)	200
Work cycle (cycles/hour)	30
Working cycle (cycles/day)	300
DIMENSIONAL AND GENERAL DATA	
Protection level (IP)	IP41
Working temp. (°C Min/Max)	-20 ÷ +55
Pack dimensions (mm)	380x380x125
Weight (kg)	3,2

RAIL TECHNICAL SPECIFICATIONS

Code	Description	Pack/ Pallet
SPYRAIL321	1 x 3.2 m rail with assembly accessories	48
SPYRAIL162	2 x 1.6 m rails with assembly accessories	48
SPYRAIL081	0.8 m extension with assembly accessories (to add to the other rails so as to reach a length of 4 m)	48

Code	SPYRAIL321	SPYRAIL162	SPYRAIL081*
Type	3.2 m (one section)	3.2 m (2 pcs length 1.6 m)	0.8 m (rails to reach length 4 m)
Installed rail length (mm)	3270		4075
Useful travel (mm)	2710		3515
Weight (kg)	7,5	8,35	3,3
Pack dimensions (mm)	3230x110x50	1760x110x50	960x110x50
Accessories pack dimensions (mm)	400x400x90		

* To be used in combination with SPYRAIL321 e SPYRAIL162 rails

UTILISATION LIMITS

Using the maximum travel

	Non-projecting up-and-over door (with SPA5)		Projecting up-and-over door (with SPA5) or with springs (without SPA5)		Sectional	
	H	L	H	L	H	L
3.2 m guide	2,3 m	4 m	2,8 m	4 m	2,5 m	4,2 m
4 m guide	3,1 m	3 m	3,5 m	3,3 m	3,3 m	3,2 m

DIMENSIONS

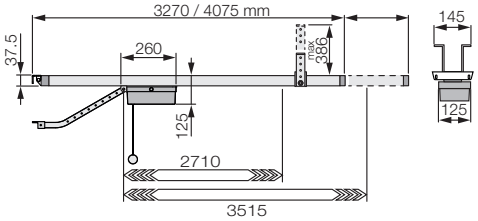

Motor

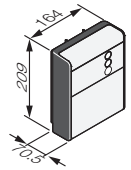

Separate control unit

COMPATIBILITY TABLE WITH CONTROL SYSTEMS AND ACCESSORIES

	receiver				transmitter						photocells									flashing light		
Code	Built-in*	OXI	OXIBD	OXILR	ERA INTI	ERA ONE	ERA ONE BD	ERA ONE LR	ERA FLOR	NICEWAY	EPS	EPM	EPL	EPSB	EPMB	EPLB	EPMOW	EPMOR	F210B	FT210B	ELAC	ELDC	WLT
SPYBOXHS	•	•	•	•	•	•	•	•	•	•				•	•	•	•	•	•	•		•	•

* Radio receiver incompatible with Opera system

KOVOPOLOTOVARY.CZ

MOTOTOVARY.CZ

Systems for swing gates

Surface mounted

44. Toona 4
46. Toona 5
48. Toona 7
50. Toonakit BD
52. Wingo4kit BD
54. Wingokit 4024 BD
56. Wingo5kit BD
58. Wingokit 5024 BD
60. Oltre 1824

Surface mounted, with articulated arm

62. Walkykit 1024 BD
64. Walkykit 2024 BD
66. Hopp
68. Hoppkit BD
70. Hyke
72. Hykekit BD
74. Hyppo 7000

Underground installation

76. S-Fab
78. S-Fabkit 2024 BD
80. S-Fabkit 2124 BD
82. M-Fab
84. L-Fab
86. Big-Fab

KOVO POLOTOVARY.CZ

Selection guide

Surface mounted, also available in kit with bidirectional technology

Toona HS
pages 20/21

Toona, Toonakit BD
pages 44/51

- for leaves up to 3 m
  - 24 Vdc version with magnetic encoder, irreversible, with mechanical stop on opening. Compatible with control units with BlueBUS technology, Solemyo and Opera
    - → **TO4024**
    - KIT → **TOONA4024BDKCE**
  - 230 Vac
    - irreversible
      - increased speed
        - with limit switch on opening → **TO4005**
        - with limit switch on opening and closing → **TO4006**
      - cruising speed, with limit switch on opening → **TO4015**
    - reversible, increased speed, with limit switch on opening → **TO4605**
- for leaves up to 5 m
  - 24 Vdc version with magnetic encoder, irreversible, with mechanical stop on opening. Compatible with control units with BlueBUS technology, Solemyo and Opera
    - → **TO5024**
    - Hi-Speed → **TO5024HS**
    - for intensive use → **TO5024I**
  - 230 Vac
    - irreversible, cruising speed
      - with limit switch on opening → **TO5015**
      - with limit switch on opening and closing → **TO5016**
    - reversible, increased speed → with limit switch on opening → **TO5605**
- for leaves up to 6 m
  - 24 Vdc version with magnetic encoder, irreversible, with mechanical stop on opening. Compatible with control units with BlueBUS technology, Solemyo and Opera → Hi-Speed → **TO6024HS**
- for leaves up to 7 m
  - 24 Vdc version with magnetic encoder, irreversible, with mechanical stop on opening. Compatible with control units with BlueBUS technology, Solemyo and Opera → **TO7024**

Titan HS
pages 24/25

- for leaves up to 3.7 m
  - 24 Vdc, irreversible, increased speed, with magnetic encoder → **TTN3724HS**
  - 24 Vdc, reversible, increased speed, with magnetic encoder → **TTN3724RHS**
- for leaves up to 6 m
  - 24 Vdc, irreversible, increased speed, with magnetic encoder → **TTN6024HS**
  - 24 Vdc, reversible, increased speed, with magnetic encoder → **TTN6024RHS**

Wingo HS
pages 22/23

Wingokit BD
pages 52/59

- for leaves up to 2 m
  - 24 Vdc, irreversible, increased speed. Compatible for operation with Solemyo → **WINGO4024BDKCE**
  - 230 Vac → **WINGO4KIT**
- for leaves up to 3 m
  - 24 Vdc version with magnetic encoder, irreversible, with mechanical stop on opening. Compatible with control units with BlueBUS technology, Solemyo and Opera → Hi-Speed → **WG3524HS**
- for leaves up to 3.5 m
  - 24 Vdc, irreversible, increased speed. Compatible for operation with Solemyo → **WINGO5024BDKCE**
  - 230 Vac → **WINGO5BDKCE**

KOVOPOLOTOVARY.CZ

Installed also inside a compact post

For swing gates weighing up to 100 kg and with a leaf length of up to 1.8 m. 24 Vdc irreversible electromechanical gear motor. Dedicated control unit with BlueBUS technology, Solemyo and Opera.

Oltre → **OLTRE 1824**

pages 60/61

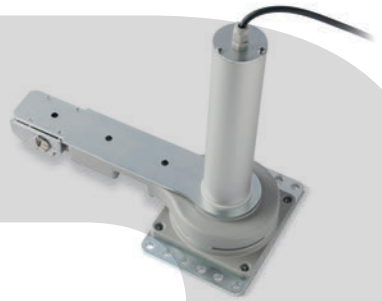

Surface mounted, with articulated arm, recommended for small posts, in kit with bidirectional technology

For leaves up to 1.8 m, 24 Vdc irreversible with built-in control unit equipped with BlueBUS technology, compatible for operation with Solemyo and Opera. Mechanical limit switch on closing.

Walkykit BD

- for 1-leaf → **WALKY1024BDKCE**
- for 2-leaf → **WALKY2024BDKCE**

pages 62/65

Surface mounted, articulated arm, also for large size posts and lightweight structures, also available in kit with bidirectional technology

For leaves up to 2.4 m, 24 Vdc, irreversible. Control units compatible with Solemyo. With limit switch on openin.

Hopp
Hoppkit BD

- integrated control unit, with BlueBUS technology, Solemyo and Opera → **HO7124**
- without control unit → **HO7224**
- **KIT** → **HOPPBDKCE**

pages 66/69

KOVOPOLOTOVARY.CZ

Selection guide

Surface mounted, articulated arm, for large size posts, also available in kit with bidirectional technology

Hyke HS
pages 26/27

Hyke, Hykekit BD
pages 70/73

- for leaves up to 3 m — 24 Vdc, irreversible, with limit switch on opening and closing — Hi-Speed
  - integrated control unit, with BlueBUS technology, Solemyo and Opera → **HK7024HS**
  - without built-in control unit → **HK7224HS**
- for leaves up to 3.5 m — 24 Vdc, irreversible, with limit switch on opening and closing
  - integrated control unit, with BlueBUS technology, Solemyo and Opera → **HK7024**
  - without built-in control unit → **HK7224**
  - **KIT** → **HYKEBDKCE**

For leaves up to 3 m, irreversible.
Hyppo
pages 74/75

- 230 Vac with limit switch on opening and closing → **HY7005**
- 24 Vdc version with magnetic encoder. Compatible with control units with BlueBUS technology, Solemyo and Opera → **HY7024**

Underground installation, also available in kit with bidirectional technology

For leaves up to 2.3 m, 24 Vdc irreversible, mechanical limit switches on opening and closing.
S-Fab
S-Fabkit BD
pages 76/81

- compatible with control units for operation with Solemyo → **SFAB2024**
  - **KIT** → **SFAB2024BDKCE**
- with magnetic encoder, compatible with control units using BlueBUS technology, Solemyo and Opera → **SFAB2124**
  - **KIT** → **SFAB2124BDKCE**

KOVOPOLOTOVARY.CZ

Underground installation

For leaves up to 3 m
irreversible.

M-Fab HS
pages 28/29

M-Fab
pages 82/83

24 Vdc version with magnetic encoder.
Compatible with control units with
BlueBUS technology, Solemyo and Opera

- Hi-Speed → **MFAB3024HS**
- → **MFAB3024**

230 Vac, grease lubrication

- increased speed → **MFAB3000**
- cruising speed → **MFAB3000L**

For leaves up to 4 m
irreversible.

L-Fab HS
pages 30/31

L-Fab
pages 84/85

24 Vdc version with magnetic encoder.
Compatible with control units with
BlueBUS technology, Solemyo and Opera

- Hi-Speed → **LFAB4024HS**
- → **LFAB4024**

230 Vac → **LFAB4000**

For leaves up to 5 m, irreversible,
24 Vdc version with magnetic encoder.
Compatible with control units
with BlueBUS technology,
Solemyo and Opera.

Big-Fab
pages 86/87

→ **BFAB5024**

KOVOPOLOTOVARY.CZ

Nice

BiDi | Yubii | SOLEMYO | OPERA | BLUEBUS | 24V | 230V

Toona 4

For swing gates with leaves up to 3 m

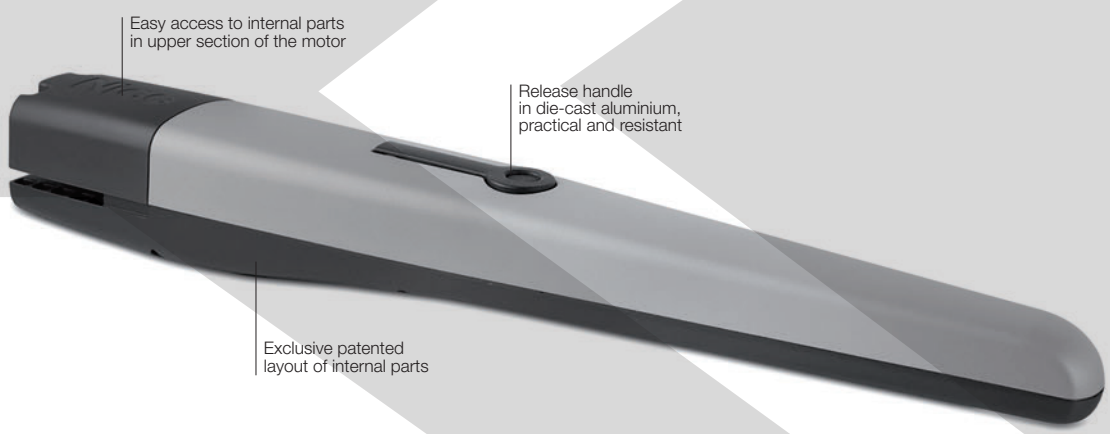

Ideal for residential applications.

Electromechanical gear motor, surface mounted. Also available in 24 Vdc version, with magnetic encoder.

Reliability and durability over time: thanks to the housing, made up of two tough aluminium shells with polyester paint finish; more resistant to atmospheric agents.

Internal moving parts completely in steel, light alloys and technopolymers.

Silent: patented layout of internal parts and lead nut in bronze.

Generously sized and practical connection compartment: rapid and easy access from above to internal parts located in the upper section of the motor.

Simple installation and maintenance: with built-in capacitor.

Recommended control units: MC800, Moonclever MC824H for TO4024.

24 Vdc version with magnetic encoder. **Perfect for intensive use**, compatible with the control unit Moonclever MC824H:

- simple programming, by means of a single key;
- automatic memorization of limit switches on opening and closing with self-learning function;
- automatic fault diagnostics;
- programming of pause time;
- pedestrian pass door;
- deceleration on opening and closing;
- obstacle detection with dual technology;
- operation in event of power failure by means of optional rechargeable batteries (PS324);
- provision for connection of latest generation resistive sensitive edges.

Nice **BiDirectional products** indicate the status of the automations and confirm correct reception of the command.

Discover the complete range of BiDirectional products on page 176.

Yubii is the new Nice ecosystem that connects all the automations in the home.

Discover all the benefits of the Yubii system on page 170.

DIMENSIONS

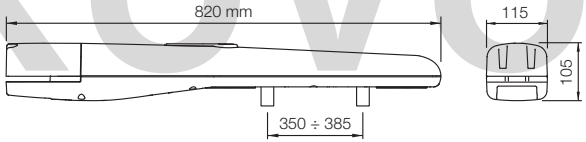

UTILISATION LIMITS

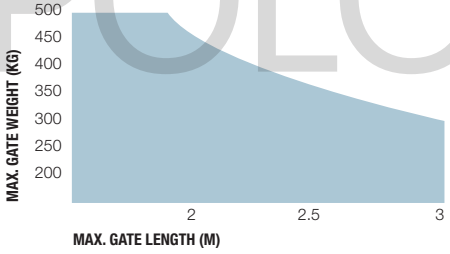

The shape, the height of the gate and the weather conditions can considerably reduce the values shown in the graph to the side.

Use in windy areas 230 Vac models.

KOVO POLOTOVARY.CZ

COMMON ACCESSORIES

CORE
Nice Wi-Fi-Radio Gateway.

Pc./Pack 1

IBT4N
Interface for connecting the O-View programming unit.

Pc./Pack 1

IT4WIFI
Smart Wi-fi interface to manage gates and garage doors by smartphone (*).

Pc./Pack 1

PLA6
Rear bracket 250 mm long.

Pc./Pack 1

PLA14
Screw-adjustable rear bracket.

Pc./Pack 2

PLA15
Screw-adjustable front bracket.

Pc./Pack 2

PLA10
Vertical 12 V electric lock.

Pc./Pack 1

PLA11
Horizontal 12 V electric lock.

Pc./Pack 1

ACCESSORY FOR 24 V VERSION

PLA13
Mechanical travel stops for closing and opening manoeuvres.

Pc./Pack 4

TS
Signboard.

Pc./Pack 1

PS324
24 V battery with integrated battery charger.

Pc./Pack 1

SOLEMYO KIT
The solar power to automate gates, garage doors or barrier gates.

See page 229.

* Not compatible with the Solemyo kit and PS324

TECHNICAL SPECIFICATIONS

Code	Description	Pack/Pallet
T04024	Irreversible, 24 Vdc, with magnetic encoder, mechanical stop on opening	20
T04005	Irreversible, 230 Vac, increased speed, with limit switch on opening	20
T04006	Irreversible, 230 Vac, increased speed, with limit switch on opening and closing	20
T04015	Irreversible, 230 Vac, cruising speed, with limit switch on opening	20
T04605	Reversible, 230 Vac, increased speed, with limit switch on opening	20

Code	T04024	T04005	T04006	T04015	T04605
ELECTRICAL DATA					
Power supply (Vac 50 Hz)*	-	230			
Power supply (Vdc)	24	-			
Absorption (A)	5	1,5			1,3
Power (W)	120	340			300
PERFORMANCE DATA					
Speed (m/s)	0,016			0,013	0,016
Force (N)	1800				
Work cycle (cycles/hour)	95**	58		54	50
DIMENSIONAL AND GENERAL DATA					
Protection level (IP)	44				
Working temp. (°C Min/Max)	-20 ÷ +50				
Dimensions (mm)	820x115x105 h				
Weight (kg)	6				

* 60 Hz version available on request.
** With optimal installation.

COMPATIBILITY TABLE WITH CONTROL SYSTEMS AND ACCESSORIES

	control unit/receiver							transmitter						photocells											flashing light		
Code	MC200 / Built-in*	MC800 / OXI / OXIBD / OXILR	DPR0500 / OXI / OXIBD / OXILR	DPR0924 / OXI / OXIBD / OXILR	MC424L / Built-in* / OXI / OXIBD / OXILR	MC824H / OXI / OXIBD / OXILR	MC824HR / OXI / OXIBD / OXILR	ERA INTI	ERA ONE	ERA ONE BD	ERA ONE LR	ERA FLOR	NICEWAY	EPS	EPM	EPL	EPSB	EPMB	EPLB	EPMOW	F210	FT210	F210B	FT210B	ELAC	ELDC	WLT
T04024						•		•	•	•	•	•	•				•	•	•	•			•			•	•
T04005		•						•	•	•	•	•	•	•	•	•					•	•			•		
T04006		•						•	•	•	•	•	•	•	•	•					•	•			•		
T04015		•						•	•	•	•	•	•	•	•	•					•	•			•		
T04605		•						•	•	•	•	•	•	•	•	•					•	•			•		

* Radio receiver incompatible with Opera system

KOVOPOLOTOVARY.CZ

Nice

BiDi | Yubii | SOLEMYO | OPERA | BLUEBUS | 24V | 230V

Toona 5

For swing gates with leaves up to 5 m

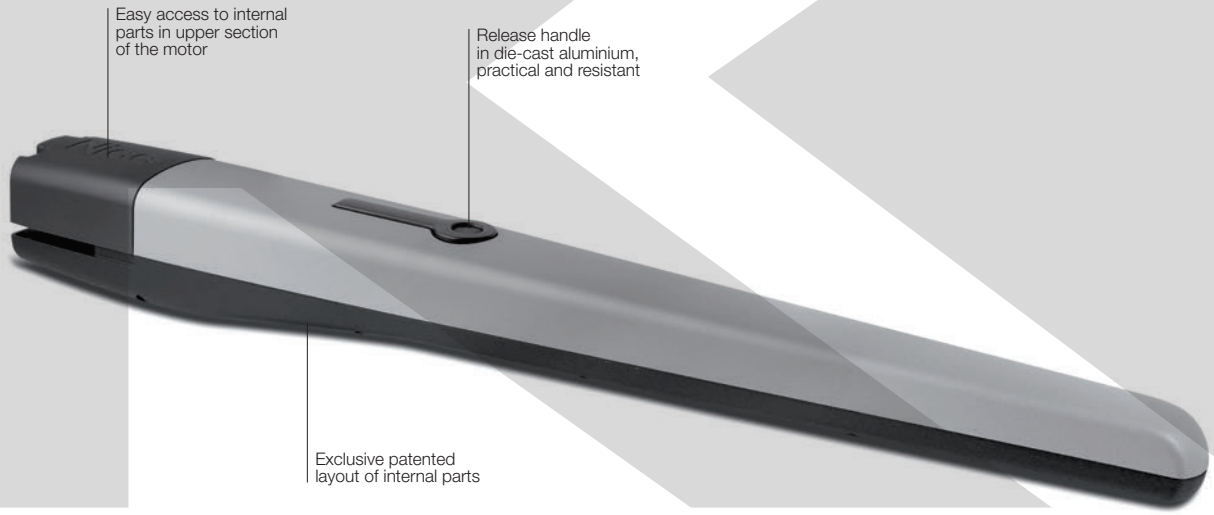

Ideal for residential and industrial applications.

Electromechanical gear motor, surface mounted. Also available in 24 Vdc version, with magnetic encoder.

Reliability and durability over time: thanks to the housing, made up of two tough aluminium shells with polyester paint finish; more resistant to atmospheric agents.

Internal moving parts completely in steel, light alloys and technopolymers.

TO5024I ideal for intensive work load, thanks to the torque of 2200 Nm, can work on continuous duty on large sized gates.

Silent: patented layout of internal parts and lead nut in bronze.

Generously sized and practical connection compartment: rapid and easy access from above to internal parts located in the upper section of the motor.

Simple installation and maintenance: with built-in capacitor.

Recommended control units: MC800, Moonclever MC824H for TO5024 and TO5024I.

24 Vdc version with magnetic encoder. **Perfect for intensive use**, compatible with the control unit Moonclever MC824H:

- simple programming, by means of a single key;
- automatic memorization of limit switches on opening and closing with self-learning function;
- automatic fault diagnostics;
- programming of pause time;
- pedestrian pass door;
- deceleration on opening and closing;
- obstacle detection with dual technology;
- operation in event of power failure by means of optional rechargeable batteries (PS324);
- provision for connection of latest generation resistive sensitive edges.

Nice **BiDirectional products** indicate the status of the automations and confirm correct reception of the command.

Discover the complete range of BiDirectional products on page 176.

Yubii is the new Nice ecosystem that connects all the automations in the home.

Discover all the benefits of the Yubii system on page 170.

DIMENSIONS

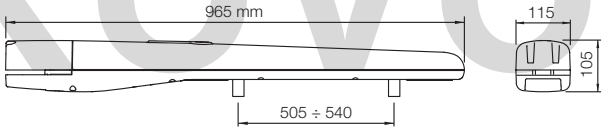

UTILISATION LIMITS

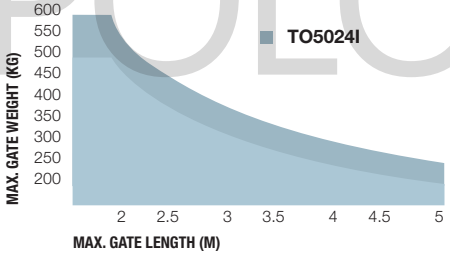

The shape, the height of the gate and the weather conditions can considerably reduce the values shown in the graph to the side.

Use in windy areas 230 Vac models.

KOVO POLOTOVARY.CZ

COMMON ACCESSORIES

CORE
Nice Wi-Fi-Radio Gateway.

Pc./Pack 1

IBT4N
Interface for connecting the O-View programming unit.

Pc./Pack 1

IT4WIFI
Smart Wi-fi interface to manage gates and garage doors by smartphone (*).

Pc./Pack 1

PLA6
Rear bracket 250 mm long.

Pc./Pack 1

PLA8
Screw-adjustable front bracket.

Pc./Pack 1

PLA10
Vertical 12 V electric lock (required for gates longer than 3 m).

Pc./Pack 1

PLA11
Horizontal 12 V electric lock (required for gates longer than 3 m).

Pc./Pack 1

PLA13
Mechanical travel stops for closing and opening manoeuvres.

Pc./Pack 4

TS
Signboard.

Pc./Pack 1

ACCESSORY FOR 24 V VERSION

PS324
24 V battery with integrated battery charger.

Pc./Pack 1

SOLEMYO KIT
The solar power to automate gates, garage doors or barrier gates.

See page 229.

* Not compatible with the Solemyo kit and PS324

TECHNICAL SPECIFICATIONS

Code	Description	Pack/Pallet
T05024	Irreversible, 24 Vdc, with magnetic encoder, mechanical stop on opening	20
T05024I	Irreversible, 24 Vdc, with magnetic encoder, mechanical stop on opening; for intensive use	20
T05015	Irreversible, 230 Vac, cruising speed, with limit switch on opening	20
T05016	Irreversible, 230 Vac, cruising speed, with limit switch on opening and closing	20
T05605	Reversible, 230 Vac, increased speed, with limit switch on opening	20

Code	T05024	T05024I	T05015	T05016	T05605
ELECTRICAL DATA					
Power supply (Vac 50 Hz)*	-		230		
Power supply (Vdc)	24		-		
Absorption (A)	5		1,5		1,3
Power (W)	120		340		300
PERFORMANCE DATA					
Speed (m/s)	0,016	0,013			0,016
Force (N)	1800	2200	1800		
Work cycle (cycles/hour)	95**	75***		54	50
DIMENSIONAL AND GENERAL DATA					
Protection level (IP)	44				
Working temp. (°C Min/Max)	-20 ÷ +50				
Dimensions (mm)	965x115x105 h				
Weight (kg)	7				

* 60 Hz version available on request.
** With optimal installation.
*** The reduction in number of manoeuvres with respect to the version T05024 depends solely on the lower manoeuvre speed.

COMPATIBILITY TABLE WITH CONTROL SYSTEMS AND ACCESSORIES

	control unit/receiver							transmitter						photocells										flashing light		
Code	MC200 / Built-in*	MC800 / OXI / OXIBD / OXILR	DPRO500 / OXI / OXIBD / OXILR	DPRO924 / OXI / OXIBD / OXILR	MC424L / Built-in* / OXI / OXIBD / OXILR	MC824H / OXI / OXIBD / OXILR	MC824HR / OXI / OXIBD / OXILR	ERA INTI	ERA ONE	ERA ONE BD	ERA ONE LR	ERA FLOR	NICEWAY	EPS	EPM	EPL	EPSB	EPMB	EPLB	EPMOW	F210	FT210	F210B	FT210B	ELAC	ELDC	WLT
T05024						•		•	•	•	•	•	•				•	•	•	•			•		•	•
T05024I						•		•	•	•	•	•	•				•	•	•	•			•		•	•
T05015		•						•	•	•	•	•	•	•	•	•					•	•			•		
T05016		•						•	•	•	•	•	•	•	•	•					•	•			•		
T05605		•						•	•	•	•	•	•	•	•	•					•	•			•		

* Radio receiver incompatible with Opera system

KOVOPOLOTOVARY.CZ

Nice

BiDi | Yubii | SOLEMYO | OPERA | BLUEBUS | 24V

Toona 7

For swing gates with leaves up to 7 m

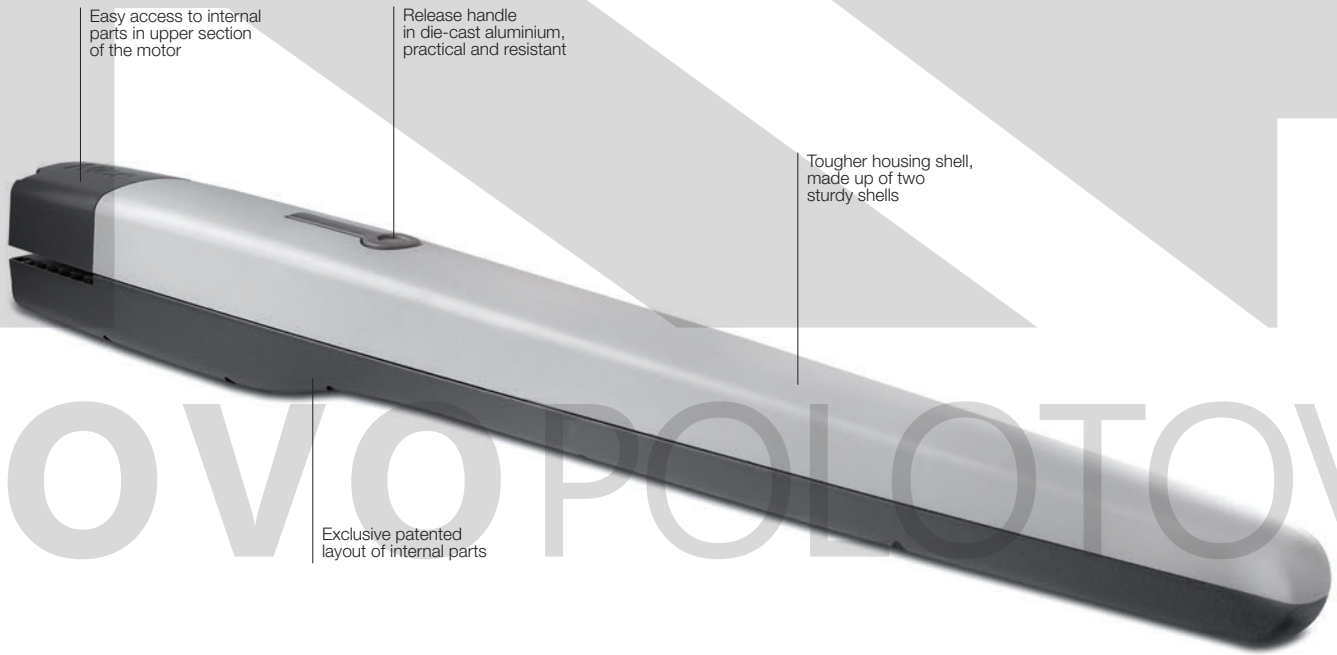

Ideal for industrial applications, designed for intensive use.

Electromechanical gear motor, surface mounted, powered at 24 Vdc, with magnetic encoder.

Reliability and durability over time: thanks to the housing, made up of two tough aluminium shells with polyester paint finish; more resistant to atmospheric agents.

Internal moving parts completely in steel, light alloys and technopolymers.

Silent: patented layout of internal parts and lead nut in bronze.

Generously sized and practical connection compartment: rapid and easy access from above to internal parts located in the upper section of the motor.

Moonclever MC824H control unit:

- simple programming, by means of a single key;
- automatic memorization of limit switches on opening and closing with self-learning function;
- automatic fault diagnostics;
- programming of pause time;
- pedestrian pass door;
- deceleration on opening and closing;
- obstacle detection with dual technology;
- operation in event of power failure by means of optional rechargeable batteries (PS324);
- provision for connection of latest generation resistive sensitive edges.

Nice **BiDirectional products** indicate the status of the automations and confirm correct reception of the command.

Discover the complete range of BiDirectional products on page 176.

Yubii is the new Nice ecosystem that connects all the automations in the home.

Discover all the benefits of the Yubii system on page 170.

KOVOPOLOTOVARY.CZ

COMMON ACCESSORIES

CORE
Nice Wi-Fi-Radio Gateway.

Pc./Pack 1

IBT4N
Interface for connecting the O-View programming unit.

Pc./Pack 1

IT4WIFI
Smart Wi-fi interface to manage gates and garage doors by smartphone (*).

Pc./Pack 1

PS324
24 V battery with integrated battery charger.

Pc./Pack 1

PLA10
Vertical 12 V electric lock (required for gates longer than 3 m).

Pc./Pack 1

PLA11
Horizontal 12 V electric lock (required for gates longer than 3 m).

Pc./Pack 1

TS
Signboard.

Pc./Pack 1

SOLEMYO KIT
The solar power to automate gates, garage doors or barrier gates.

See page 229.

* Not compatible with the Solemyo kit and PS324

TECHNICAL SPECIFICATIONS

Code	Description	Pack/Pallet
T07024	Irreversible, 24 Vdc, fast, with magnetic encoder, mechanical stop on opening and closing	20

Code	**T07024**
ELECTRICAL DATA	
Power supply (Vdc)	24
Absorption (A)	5
Power (W)	120
PERFORMANCE DATA	
Speed (m/s)	0,013
Force (N)	2700
Work cycle (cycles/hour)	41
DIMENSIONAL AND GENERAL DATA	
Protection level (IP)	44
Working temp. (°C Min/Max)	-20 ÷ +50
Dimensions (mm)	1200x128x150 h
Weight (kg)	15

UTILISATION LIMITS

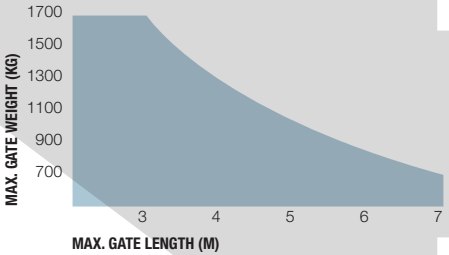

The shape, the height of the gate and the weather conditions can considerably reduce the values shown in the graph to the side.

DIMENSIONS

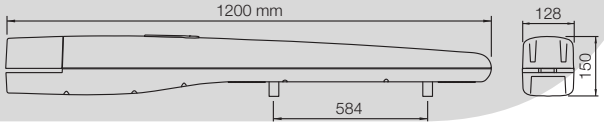

COMPATIBILITY TABLE WITH CONTROL SYSTEMS AND ACCESSORIES

	control unit/receiver							transmitter						photocells										flashing light		
Code	MC200 / Built-in*	MC800 / OXI / OXIBD / OXILR	DPR0500 / OXI / OXIBD / OXILR	DPR0924 / OXI / OXIBD / OXILR	MC424L / Built-in* / OXI / OXIBD / OXILR	MC824H / OXI / OXIBD / OXILR	MC824HR / OXI / OXIBD / OXILR	ERA INTI	ERA ONE	ERA ONE BD	ERA ONE LR	ERA FLOR	NICEWAY	EPS	EPM	EPL	EPSB	EPMB	EPLB	EPMOW	F210	FT210	F210B	FT210B	ELAC	ELDC	WLT
T07024						•	•	•	•	•	•	•	•				•	•	•	•			•		•	•

* Radio receiver incompatible with Opera system

* Not compatible with the Solemyo kit and PS324

KOVOPOLOTOVARY.cz

Nice

BiDi | Yubii | SOLEMYO | OPERA | BLUEBUS | 24V

Toonakit BD

For swing gates with leaves up to 3 m

Ideal for residential applications.

24 Vdc, electromechanical gear motor, surface mounted, with magnetic encoder.

Reliability and durability over time: thanks to the housing, made up of two tough aluminium shells with polyester paint finish; more resistant to atmospheric agents.

Internal moving parts completely in steel, light alloys and technopolymers.

Silent: patented layout of internal parts and lead nut in bronze.

Generously sized and practical connection compartment: rapid and easy access from above to internal parts located in the upper section of the motor.

Ease of installation and maintenance.

Moonclever MC824H control unit:

- simple programming, by means of a single key;
- automatic memorization of limit switches on opening and closing with self-learning function;
- automatic fault diagnostics;
- programming of pause time;
- pedestrian pass door;
- deceleration on opening and closing;
- obstacle detection with dual technology;
- operation in event of power failure by means of optional rechargeable batteries (PS324);
- provision for connection of latest generation resistive sensitive edges.

Nice **BiDirectional products** indicate the status of the automations and confirm correct reception of the command.

Discover the complete range of BiDirectional products on page 176.

Yubii is the new Nice ecosystem that connects all the automations in the home.

Discover all the benefits of the Yubii system on page 170.

NEW

The kit contains:

TO4024
2 Electromechanical irreversible gear motors, surface mounted. With mechanical stop on opening.

ON3EBD
2 Transmitters 433.92 MHz, 3 channels, bidirectional

MC824H
1 Control unit with OXIBD bidirectional radio receiver with connector included.

EPMB
1 Couple of external photocells designed for connection by Nice BlueBUS.

ELDC
1 LED flashing light with integrated aerial.

TS
1 Signboard.

KOVOPOLOTOVARY.CZ

COMMON ACCESSORIES

CORE
Nice Wi-Fi-Radio Gateway.

Pc./Pack 1

IBT4N
Interface for connecting the O-View programming unit.

Pc./Pack 1

IT4WIFI
Smart Wi-fi interface to manage gates and garage doors by smartphone (*).

Pc./Pack 1

PS324
24 V battery with integrated battery charger.

Pc./Pack 1

PLA6
Rear bracket 250 mm long.

Pc./Pack 1

PLA14
Screw-adjustable rear bracket.

Pc./Pack 2

PLA15
Screw-adjustable front bracket.

Pc./Pack 2

PLA10
Vertical 12 V electric lock.

Pc./Pack 1

PLA11
Horizontal 12 V electric lock.

Pc./Pack 1

PLA13
Mechanical travel stops for closing and opening manoeuvres.

Pc./Pack 4

TS
Signboard.

Pc./Pack 1

SOLEMYO KIT
The solar power to automate gates, garage doors or barrier gates.

See page 229.

* Not compatible with the Solemyo kit and PS324

TECHNICAL SPECIFICATIONS

Code	Description	Pack/Pallet
T0ONA4024BDKCE	Kit for automating swing gates with a leaf length of up to 3 m, 24 Vdc, surface mounted, with bidirectional technology	12

Code	**T04024**
ELECTRICAL DATA	
Power supply (Vdc)	24
Absorption (A)	5
Power (W)	120
PERFORMANCE DATA	
Speed (m/s)	0,016
Force (N)	1800
Work cycle (cycles/hour)	95*
DIMENSIONAL AND GENERAL DATA	
Protection level (IP)	44
Working temp. (°C Min/Max)	-20 ÷ +50
Dimensions (mm)	820x115x105 h
Weight (kg)	6

* With optimal installation.

UTILISATION LIMITS

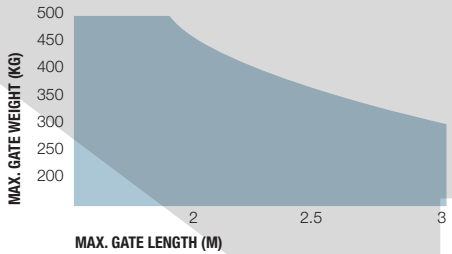

The shape, the height of the gate and the weather conditions can considerably reduce the values shown in the graph to the side.

Use in windy areas 230 Vac models.

DIMENSIONS

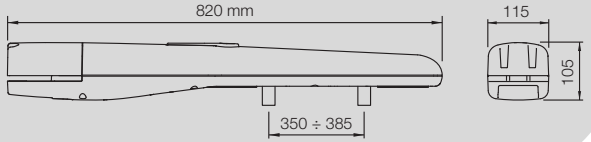

KOVO POLOTOVARY.CZ

Nice

BiDi | Yubii | OPERA | BLUEBUS | 230V

Wingo4kit BD

For swing gates with leaves up to 2 m

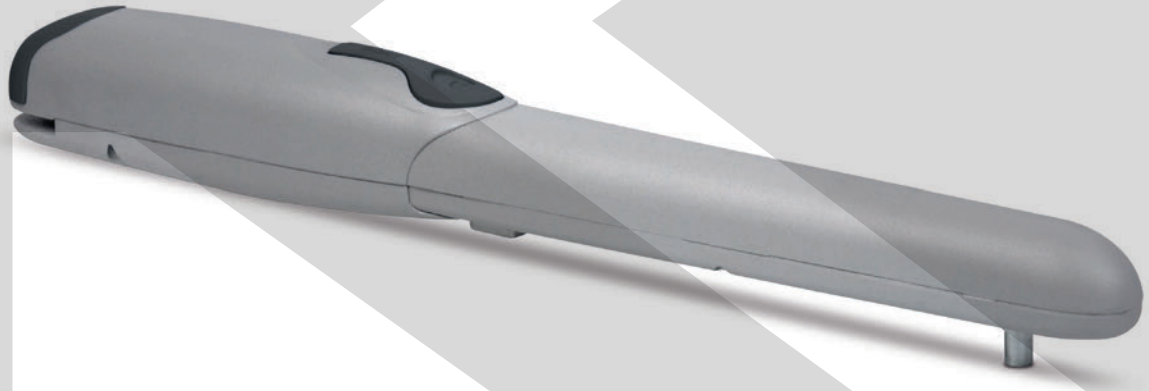

Electromechanical gear motor, surface mounted.

Reliable and silent: patented layout of internal parts, fewer moving parts.

Easy to install: after the gear motor has been assembled, all electrical connections are made from above.

Built-in capacitor.

User-friendly release with personalised Nice key and standard lock included.

Pre-assembled, travel stops on opening.

MC800 control unit:

- simple programming, by means of a single key;
- automatic memorization of limit switches on opening and closing with self-learning function;
- automatic fault diagnostics;
- programming of pause time;
- pedestrian pass door;
- provision for connection of latest generation resistive sensitive edges;
- programmable maintenance warning.

Nice **BiDirectional products** indicate the status of the automations and confirm correct reception of the command.

Discover the complete range of BiDirectional products on page 176.

Yubii is the new Nice ecosystem that connects all the automations in the home.

Discover all the benefits of the Yubii system on page 170.

NEW

The kit contains:

WG4000
2 Surface-mounted electromechanical gear motors, with Nice key release and mechanical stop on opening.

ON3EBD
2 Transmitters 433.92 MHz, 3 channels, bidirectional

MC800
1 Control unit with OXIBD bidirectional radio receiver with connector included.

EPM
1 Pair of photocells for outdoor installation

ELAC
1 LED flashing light with integrated aerial.

TS
1 Signboard.

KOVOPOLOTOVARY.CZ

COMMON ACCESSORIES

CORE
Nice Wi-Fi-Radio Gateway.

Pc./Pack 1

IBT4N
Interface for connecting the O-View programming unit.

Pc./Pack 1

IT4WIFI
Smart Wi-fi interface to manage gates and garage doors by smartphone.

Pc./Pack 1

PLA14
Screw-adjustable rear bracket.

Pc./Pack 2

PLA15
Screw-adjustable front bracket.

Pc./Pack 2

TECHNICAL SPECIFICATIONS

Code	Description	Pack/Pallet
WINGO4BDKCE	Kit for automating swing gates with a leaf length of up to 2 m, surface mounted, with bidirectional technology	12

N.B. The content of the package may vary: consult the retailer.

Code	**WG4000**
ELECTRICAL DATA	
Power supply (Vac 50 Hz)*	230
Absorption (A)	1,5
Power (W)	200
PERFORMANCE DATA	
Speed (m/s)	0,016
Force (N)	1500
Work cycle (cycles/hour)	30
DIMENSIONAL AND GENERAL DATA	
Protection level (IP)	44
Working temp. (°C Min/Max)	-20 ÷ +50
Dimensions (mm)	770x98x95 h
Weight (kg)	6

* 60 Hz version available on request.

UTILISATION LIMITS

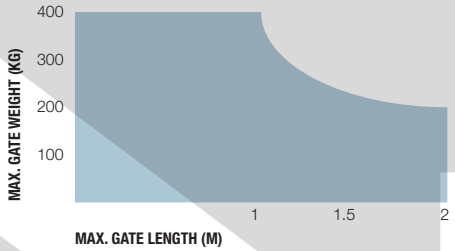

DIMENSIONS

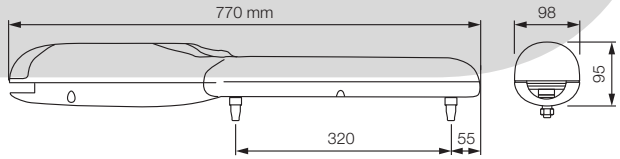

KOVOPOLOTOVARY.CZ

Nice

BiDi | Yubii | SOLEMYO | OPERA | 24V

Wingokit 4024 BD

For swing gates with leaves up to 2 m

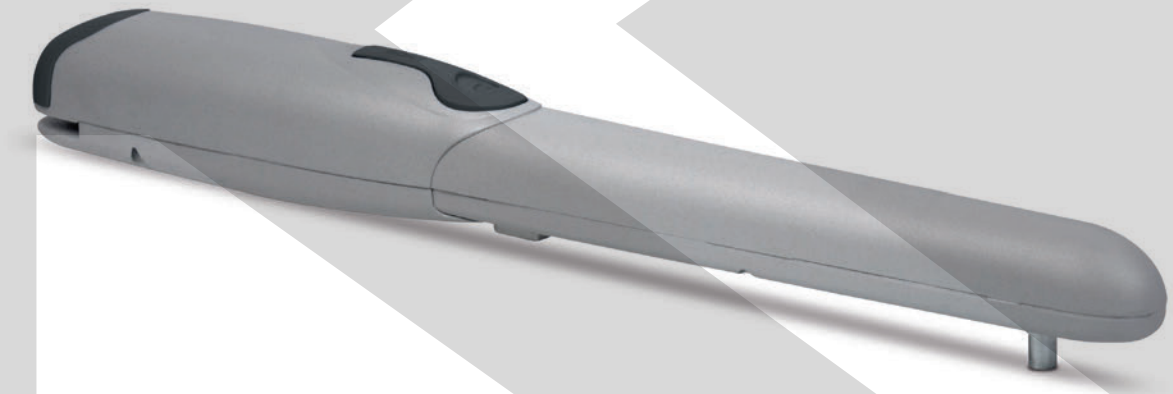

Surface mounted 24 Vdc electromechanical gear motor.

Reliable and silent: patented layout of internal parts, fewer moving parts.

Easy to install: after the gear motor has been assembled, all electrical connections are made from above.

User-friendly release with personalised Nice key and standard lock included.

Pre-assembled, travel stops on opening.

Moonclever MC424L control unit:

- built-in radio receiver;
- simple programming, by means of a single key;
- clutch with anti-crush safety feature;
- automatic memorization of limit switches on opening and closing with self-learning function;
- programming of pause time;
- pedestrian pass door;
- deceleration on opening and closing;
- obstacle detection system;
- can be linked to the 8.2 KOhm resistive sensitive edge;
- continues to work even during power failures using optional (PS124) batteries that fit inside the control unit.

Nice **BiDirectional products** indicate the status of the automations and confirm correct reception of the command.

Discover the complete range of BiDirectional products on page 176.

Yubii is the new Nice ecosystem that connects all the automations in the home.

Discover all the benefits of the Yubii system on page 170.

NEW

The kit contains:

WG4024
2 Surface-mounted electromechanical gear motors, with Nice key release and mechanical stop on opening.

ON3EBD
2 Transmitters 433.92 MHz, 3 channels, bidirectional

MC424L
1 Control unit with built-in radio receiver and OXIBD bidirectional radio receiver with connector included.

EPM
1 Pair of photocells for outdoor installation

ELDC
1 LED flashing light with integrated aerial.

TS
1 Signboard.

KOVOPOLOTOVARY.CZ

COMMON ACCESSORIES

CORE
Nice Wi-Fi-Radio Gateway.

Pc./Pack 1

IBT4N
Interface for connecting the O-View programming unit.

Pc./Pack 1

IT4WIFI
Smart Wi-fi interface to manage gates and garage doors by smartphone (*).

Pc./Pack 1

PS124
24 V battery with integrated battery charger.

Pc./Pack 1

PLA14
Screw-adjustable rear bracket.

Pc./Pack 2

PLA15
Screw-adjustable front bracket.

Pc./Pack 2

PLA10
Vertical 12 V electric lock.

Pc./Pack 1

PLA11
Horizontal 12 V electric lock.

Pc./Pack 1

SOLEMYO KIT
The solar power to automate gates, garage doors or barrier gates.

See page 229.

* Not compatible with the Solemyo kit and PS124

TECHNICAL SPECIFICATIONS

Code	Description	Pack/Pallet
WINGO4024BDKCE	Kit for automating swing gates with a leaf length of up to 2 m, 24 Vdc, surface mounted, with bidirectional technology	12

N.B. The content of the package may vary: consult the retailer.

Code	**WG4024**
ELECTRICAL DATA	
Power supply (Vdc)	24
Absorption (A)	3,5
Power (W)	85
PERFORMANCE DATA	
Speed (m/s)	0,018
Force (N)	1500
Work cycle (cycles/hour)	30
DIMENSIONAL AND GENERAL DATA	
Protection level (IP)	44
Working temp. (°C Min/Max)	-20 ÷ +50
Dimensions (mm)	770x98x95 h
Weight (kg)	6

UTILISATION LIMITS

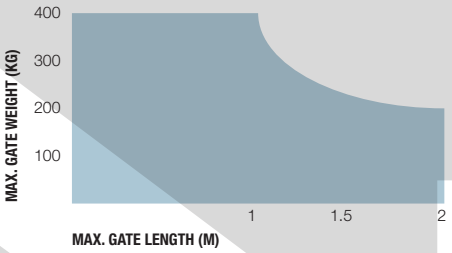

DIMENSIONS

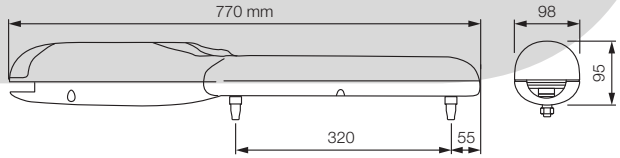

KOVOPOLOTOVARY.CZ

Nice

BiDi | Yubii | OPERA | BLUEBUS | 230V

Wingo5kit BD

For swing gates with leaves up to 3.5 m

Electromechanical gear motor, surface mounted.

Reliable and silent: patented layout of internal parts, fewer moving parts.

Easy to install: after the gear motor has been assembled, all electrical connections are made from above.

Built-in capacitor.

User-friendly release with personalised Nice key and standard lock included.

Pre-assembled, travel stops on opening.

MC800 control unit:

- simple programming, by means of a single key;
- automatic memorization of limit switches on opening and closing with self-learning function;
- automatic fault diagnostics;
- programming of pause time;
- pedestrian pass door;
- provision for connection of latest generation resistive sensitive edges;
- programmable maintenance warning.

Nice **BiDirectional products** indicate the status of the automations and confirm correct reception of the command.

Discover the complete range of BiDirectional products on page 176.

Yubii is the new Nice ecosystem that connects all the automations in the home.

Discover all the benefits of the Yubii system on page 170.

NEW

The kit contains:

WG5000
2 Surface-mounted electromechanical gear motors, with Nice key release and mechanical stop on opening.

ON3EBD
2 Transmitters 433.92 MHz, 3 channels, bidirectional

MC800
1 Control unit with OXIBD bidirectional radio receiver with connector included.

EPM
1 Pair of photocells for outdoor installation

ELAC
1 LED flashing light with integrated aerial.

TS
1 Signboard.

KOVOPOLOTOVARY.CZ

COMMON ACCESSORIES

CORE
Nice Wi-Fi-Radio Gateway.

Pc./Pack 1

IBT4N
Interface for connecting the O-View programming unit.

Pc./Pack 1

IT4WIFI
Smart Wi-fi interface to manage gates and garage doors by smartphone.

Pc./Pack 1

PLA6
Rear bracket 250 mm long.

Pc./Pack 1

PLA8
Screw-adjustable front bracket.

Pc./Pack 1

PLA10
Vertical 12 V electric lock (required for gates longer than 3 m).

Pc./Pack 1

PLA11
Horizontal 12 V electric lock (required for gates longer than 3 m).

Pc./Pack 1

TECHNICAL SPECIFICATIONS

Code	Description	Pack/Pallet
WINGO5BDKCE	Kit for automating swing gates with a leaf length of up to 3.5 m, surface mounted, with bidirectional technology	12

N.B. The content of the package may vary: consult the retailer.

Code	**WG5000**
ELECTRICAL DATA	
Power supply (Vac 50 Hz)*	230
Absorption (A)	1,5
Power (W)	200
PERFORMANCE DATA	
Speed (m/s)	0,013
Force (N)	1700
Work cycle (cycles/hour)	30
DIMENSIONAL AND GENERAL DATA	
Protection level (IP)	44
Working temp. (°C Min/Max)	-20 ÷ +50
Dimensions (mm)	920x98x95 h
Weight (kg)	6

* 60 Hz version available on request.

UTILISATION LIMITS

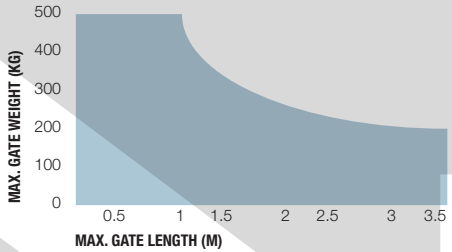

DIMENSIONS

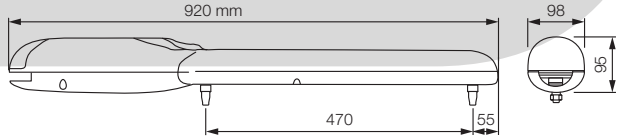

KOVOPOLOTOVARY.CZ

Nice

BiDi | Yubii | SOLEMYO | OPERA | 24V

Wingokit 5024 BD

For swing gates with leaves up to 3.5 m

Surface mounted 24 Vdc electromechanical gear motor.

Reliable and silent: patented layout of internal parts, fewer moving parts.

Easy to install: after the gear motor has been assembled, all electrical connections are made from above.

User-friendly release with personalised Nice key and standard lock included.

Pre-assembled, travel stops on opening.

Moonclever MC424L control unit:

- built-in radio receiver;
- simple programming, by means of a single key;
- clutch with anti-crush safety feature;
- automatic memorization of limit switches on opening and closing with self-learning function;
- programming of pause time;
- pedestrian pass door;
- deceleration on opening and closing;
- obstacle detection system;
- can be linked to the 8.2 KOhm resistive sensitive edge;
- continues to work even during power failures using optional (PS124) batteries that fit inside the control unit.

Nice **BiDirectional products** indicate the status of the automations and confirm correct reception of the command.

Discover the complete range of BiDirectional products on page 176.

Yubii is the new Nice ecosystem that connects all the automations in the home.

Discover all the benefits of the Yubii system on page 170.

NEW

The kit contains:

WG5024
2 Surface-mounted electromechanical gear motors, with Nice key release and mechanical stop on opening.

ON3EBD
2 Transmitters 433.92 MHz, 3 channels, bidirectional

MC424L
1 Control unit with built-in radio receiver and OXIBD bidirectional radio receiver with connector included.

EPM
1 Pair of photocells for outdoor installation

ELDC
1 LED flashing light with integrated aerial.

TS
1 Signboard.

KOVOPOLOTOVARY.CZ

COMMON ACCESSORIES

CORE
Nice Wi-Fi-Radio Gateway.

Pc./Pack 1

IBT4N
Interface for connecting the O-View programming unit.

Pc./Pack 1

IT4WIFI
Smart Wi-fi interface to manage gates and garage doors by smartphone (*).

Pc./Pack 1

PS124
24 V battery with integrated battery charger.

Pc./Pack 1

PLA6
Rear bracket 250 mm long.

Pc./Pack 1

PLA8
Screw-adjustable front bracket.

Pc./Pack 1

PLA10
Vertical 12 V electric lock (required for gates longer than 3 m).

Pc./Pack 1

PLA11
Horizontal 12 V electric lock (required for gates longer than 3 m).

Pc./Pack 1

SOLEMYO KIT
The solar power to automate gates, garage doors or barrier gates.

See page 229.

TECHNICAL SPECIFICATIONS

Code	Description	Pack/Pallet
WINGO5024BDKCE	Kit for automating swing gates with a leaf length of up to 3.5 m, 24 Vdc, surface mounted, with bidirectional technology	12

N.B. The content of the package may vary: consult the retailer.

Code	**WG5024**
ELECTRICAL DATA	
Power supply (Vdc)	24
Absorption (A)	3,5
Power (W)	85
PERFORMANCE DATA	
Speed (m/s)	0,016
Force (N)	1500
Work cycle (cycles/hour)	30
DIMENSIONAL AND GENERAL DATA	
Protection level (IP)	44
Working temp. (°C Min/Max)	-20 ÷ +50
Dimensions (mm)	920x98x95 h
Weight (kg)	6

UTILISATION LIMITS

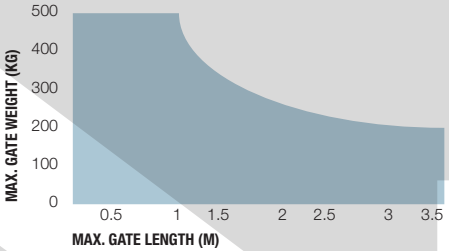

DIMENSIONS

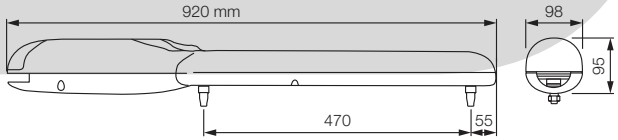

* Not compatible with the Solemyo kit and PS124

KOVO POLOTOVARY.CZ

Nice

BiDi | Yubii | SOLEMYO | OPERA | BLUEBUS | 24V

Oltre 1824

For swing gates with leaves up to 1.8 m and 100 kg

Concealed motor for swing gates.

24 Vdc irreversible electromechanical gear motor.

Minimum visual impact: the motor is small enough to be easily installed inside the profiles of the gate leaf or in very slim posts (with a minimum diameter of 55 mm).

Easy to install: the bottom-up installation simplifies fixing of the motor inside the post.

Resistant: die-cast aluminium structure, IP67, resists the most severe weather conditions.

Quick and reliable: complete opening (90°) of the leaf in about 10 seconds. Oltre has been tested for use at 60 cycles/hour, making it suitable for all contexts with intensive use.

Safe: easy-to-use external manual release: the gate can always be opened manually, without having to take it apart.

Dedicated Moonclever MC824L control unit:

- easy to programme;
- automatic memorization of limit switches on opening and closing with self-learning function;
- automatic fault diagnostics;
- programming of pause time;
- pedestrian pass door;
- deceleration on opening and closing;
- obstacle detection with dual technology;
- operation in event of power failure by means of optional rechargeable batteries (PS324);
- provision for connection of resistive sensitive edges.

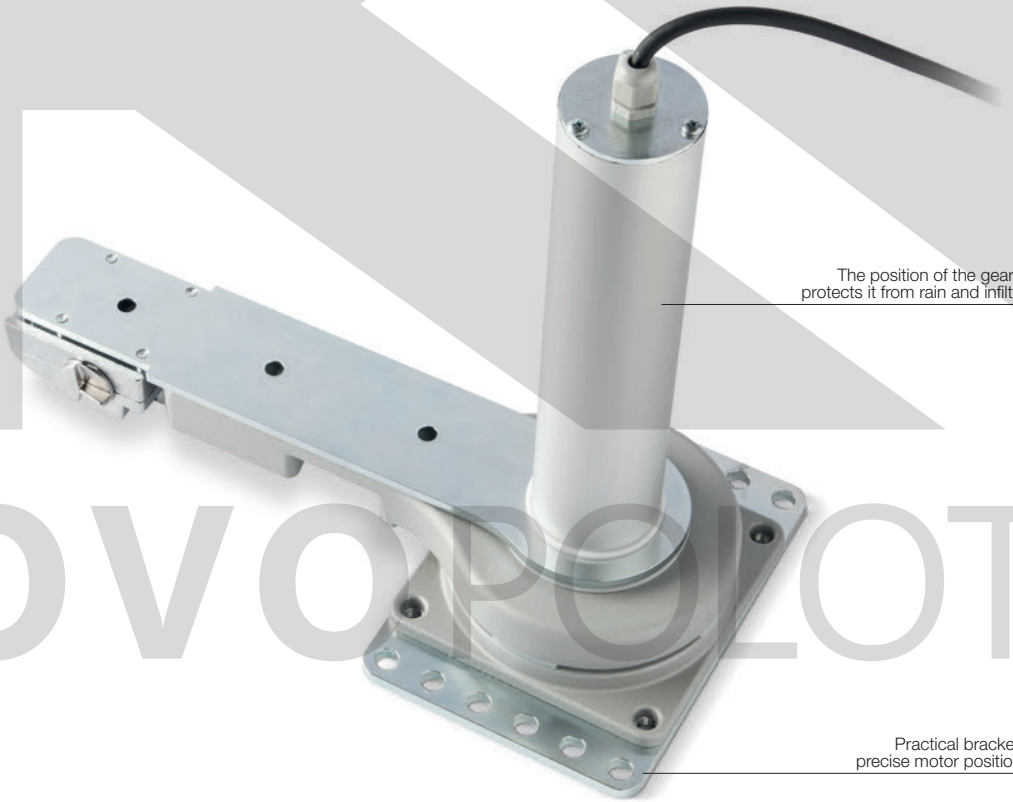

The position of the gear motor protects it from rain and infiltrations

Practical bracket for precise motor positioning

Nice **BiDirectional products** indicate the status of the automations and confirm correct reception of the command.

Discover the complete range of BiDirectional products on page 176.

Yubii is the new Nice ecosystem that connects all the automations in the home.

Discover all the benefits of the Yubii system on page 170.

KOVOPOLOTOVARY.CZ

COMMON ACCESSORIES

CORE
Nice Wi-Fi-Radio Gateway.

Pc./Pack 1

IT4WIFI
Smart Wi-fi interface to manage gates and garage doors by smartphone (*).

Pc./Pack 1

PS324
24 V battery with integrated battery charger.

Pc./Pack 1

PLA10
Vertical 12 V electric lock.

Pc./Pack 1

PLA11
Horizontal 12 V electric lock.

Pc./Pack 1

TS
Signboard.

Pc./Pack 1

SOLEMYO KIT
The solar power to automate gates, garage doors or barrier gates.

See page 229.

* Not compatible with the Solemyo kit and PS324

TECHNICAL SPECIFICATIONS

Code	Description	Pack/Pallet
OLTRE1824	24 Vdc irreversible for installation on post or leaf profile, with release lever	20

Code	**OLTRE1824**
ELECTRICAL DATA	
Power supply (Vdc)	24
Absorption (A)	1
Power (W)	25
PERFORMANCE DATA	
Speed (rpm)	1,5
Torque (Nm)	150
Work cycle (cycles/hour)	60
DIMENSIONAL AND GENERAL DATA	
Protection level (IP)	67
Working temp. (°C Min/Max)	-20 ÷ +50
Dimensions (mm)	305x145x346 h
Weight (kg)	5,5

DIMENSIONS

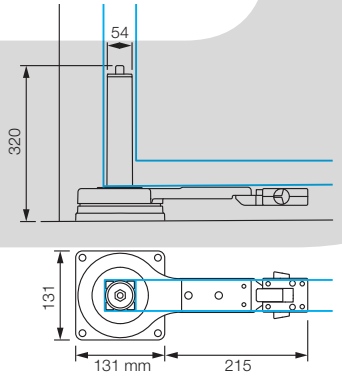

COMPATIBILITY TABLE WITH CONTROL SYSTEMS AND ACCESSORIES

	control unit/receiver								transmitter						photocells												flashing light		
Code	MC200 / Built-in*	MC800 / OXI / OXIBD / OXILR	DPR0500 / OXI / OXIBD / OXILR	DPR0924 / OXI / OXIBD / OXILR	MC424L / Built-in* / OXI / OXIBD / OXILR	MC824H / OXI / OXIBD / OXILR	MC824HR / OXI / OXIBD / OXILR	MC824L / OXI / OXIBD / OXILR	ERA INTI	ERA ONE	ERA ONE BD	ERA ONE LR	ERA FLOR	NICEWAY	EPS	EPM	EPL	EPSB	EPMB	EPLB	EPMOW	F210	FT210	F210B	FT210B	ELAC	ELDC	WLT
OLTRE1824								•	•	•	•	•	•	•				•	•	•	•			•			•	•

* Radio receiver incompatible with Opera system

KOVOPOLOTOVARY.CZ

Nice

BiDi | Yubii | SOLEMYO | OPERA | BLUEBUS | 24V

Walkykit 1024 BD

For swing gates with leaves up to 1.8 m

Especially suited to gates in wood or PVC.

Irreversible electromechanical gear motor at 24 Vdc, with articulated arm.

Ultra compact: ideal for pedestrian gates, recommended for small posts (width 8 cm).

Safe: thanks to the irreversible motor and anti-shear arm with built-in mechanical stop on closure (with installation of entire arm).

Practical: the articulated arm enables installation in specific conditions, such as in the presence of small walls or obstacles adjacent to the post.

Quick: no waiting in front of the gate, just 7 seconds to open or close (in optimal installation conditions, with reduced arm and 90° opening).

Convenient: incorporable flashing Led indicator, with courtesy light function (WLT, optional); rapid motor release for manual movement of the gate.

Built-in control unit:

- simple programming;
- automatic memorization of limit switches on opening and closing with self-learning function;
- automatic fault diagnostics;
- programming of pause time;
- pedestrian pass door;
- deceleration on opening and closing;
- provision for connection of latest generation resistive sensitive edges.

No black out: with the optional batteries (PS424) housed inside the gear motor.

Nice **BiDirectional products** indicate the status of the automations and confirm correct reception of the command.

Discover the complete range of BiDirectional products on page 176.

Yubii is the new Nice ecosystem that connects all the automations in the home.

Discover all the benefits of the Yubii system on page 170.

NEW

The kit contains:

WL1024C
1 Electromechanical gearmotor, surface mounted, with built-in control unit and OXIBD bidirectional radio receiver with connector included.

ON3EBD
2 Transmitters 433.92 MHz, 3 channels, bidirectional

TS
1 Signboard.

KOVOPOLOTOVARY.CZ

COMMON ACCESSORIES

CORE
Nice Wi-Fi-Radio Gateway.

Pc./Pack 1

IT4WIFI
Smart Wi-fi interface to manage gates and garage doors by smartphone (*).

Pc./Pack 1

WLA1
Spare control unit, for WL1024C.

Pc./Pack 1

PS424
Buffer battery.

Pc./Pack 1

PLA10
Vertical 12 V electric lock.

Pc./Pack 1

PLA11
Horizontal 12 V electric lock.

Pc./Pack 1

WLT
Multi-function LED indicator. See page 227.

Pc./Pack 1

SOLEMYO KIT
The solar power to automate gates, garage doors or barrier gates.

See page 229.

* Not compatible with the Solemyo kit and PS424

TECHNICAL SPECIFICATIONS

Code	Description	Pack/Pallet
WALKY1024BDKCE	Kit for swing gates with a leaf length of up to 1.8 m, 24 Vdc, with articulated arm, surface mounted, with bidirectional technology	18

N.B. The content of the package may vary: consult the retailer.

Code	**WL1024C**
ELECTRICAL DATA	
Power supply (Vac 50/60 Hz)	230
Absorption (A)	0,8
Power (W)	120
PERFORMANCE DATA	
Speed (rpm)	1,5 - 2,2
Torque (Nm)	120
Work cycle (cycles/hour)	50
DIMENSIONAL AND GENERAL DATA	
Protection level (IP)	44
Working temp. (°C Min/Max)	-20 ÷ +50
Dimensions (mm)	90x125x385 h
Weight (kg)	4,8

UTILISATION LIMITS

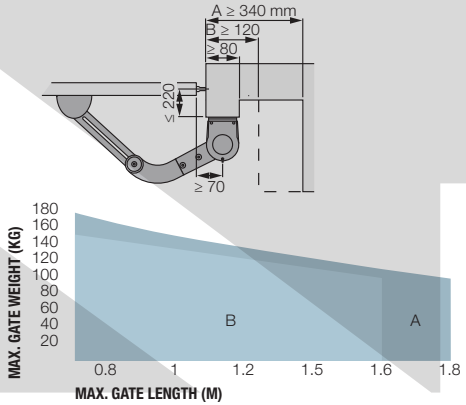

A Entire arm - **B** Reduced arm

The shape, the height of the gate and the weather conditions can considerably reduce the values shown in the graph to the side.

DIMENSIONS

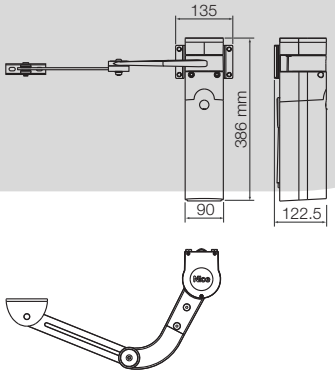

KOVOPOLOTOVARY.CZ

Nice

BiDi | Yubii | SOLEMYO | OPERA | BLUEBUS | 24V

Walkykit 2024 BD

For swing gates with leaves up to 1.8 m

Especially suited to gates in wood or PVC.

Irreversible electromechanical gear motor at 24 Vdc, with articulated arm.

Ultra compact: ideal for pedestrian gates, recommended for small posts (width 8 cm).

Safe: thanks to the irreversible motor and anti-shear arm with built-in mechanical stop on closure (with installation of entire arm).

Practical: the articulated arm enables installation in specific conditions, such as in the presence of small walls or obstacles adjacent to the post.

Quick: no waiting in front of the gate, just 7 seconds to open or close (in optimal installation conditions, with reduced arm and 90° opening).

Convenient: incorporable flashing Led indicator, with courtesy light function (WLT, optional); rapid motor release for manual movement of the gate.

Built-in control unit:

- simple programming;
- automatic memorization of limit switches on opening and closing with self-learning function;
- automatic fault diagnostics;
- programming of pause time;
- pedestrian pass door;
- deceleration on opening and closing;
- provision for connection of latest generation resistive sensitive edges.

No black out: with the optional batteries (PS424) housed inside the gear motor.

Nice **BiDirectional products** indicate the status of the automations and confirm correct reception of the command.

Discover the complete range of BiDirectional products on page 176.

Yubii is the new Nice ecosystem that connects all the automations in the home.

Discover all the benefits of the Yubii system on page 170.

NEW

The kit contains:

WL1024C + WL1024
2 Electromechanical gearmotors, surface mounted; WL1024C (with control unit and OXIBD bidirectional radio receiver with connector included), WL1024 (without control unit).

ON3EBD
2 Transmitters 433.92 MHz, 3 channels, bidirectional

EPMB
1 Couple of external photocells designed for connection by Nice BlueBUS.

WLT
1 Flashing light.

TS
1 Signboard.

KOVOPOLOTOVARY.CZ

COMMON ACCESSORIES

CORE
Nice Wi-Fi-Radio Gateway.

Pc./Pack 1

IT4WIFI
Smart Wi-fi interface to manage gates and garage doors by smartphone (*).

Pc./Pack 1

WLA1
Spare control unit, for WL1024C.

Pc./Pack 1

PS424
Buffer battery.

Pc./Pack 1

PLA10
Vertical 12 V electric lock.

Pc./Pack 1

PLA11
Horizontal 12 V electric lock.

Pc./Pack 1

WLT
Multi-function LED indicator. See page 227.

Pc./Pack 1

SOLEMYO KIT
The solar power to automate gates, garage doors or barrier gates.

See page 229.

* Not compatible with the Solemyo kit and PS424

TECHNICAL SPECIFICATIONS

Code	Description	Pack/Pallet
WALKY2024BDKCE	Kit for automating swing gates with a leaf length of up to 1.8 m, 24 Vdc, with articulated arm, surface mounted, with bidirectional technology	18

N.B. The content of the package may vary: consult the retailer.

Code	WL1024C	WL1024
ELECTRICAL DATA		
Power supply (Vac 50/60 Hz)	230	-
Power supply (Vdc)	-	24
Absorption (A)	0,8	2
Power (W)	120	30
PERFORMANCE DATA		
Speed (rpm)	1,5 - 2,2	
Torque (Nm)	120	
Work cycle (cycles/hour)	50	
DIMENSIONAL AND GENERAL DATA		
Protection level (IP)	44	
Working temp. (°C Min/Max)	-20 ÷ +50	
Dimensions (mm)	90x125x385 h	
Weight (kg)	4,8	4,3

UTILISATION LIMITS

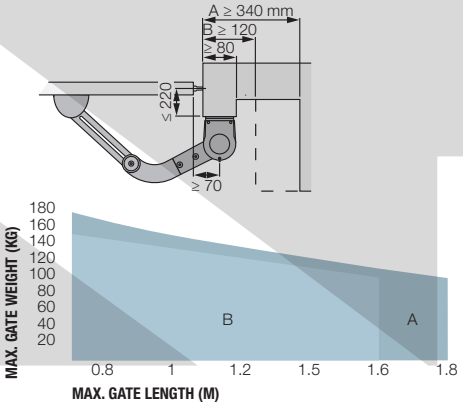

A Entire arm - **B** Reduced arm

The shape, the height of the gate and the weather conditions can considerably reduce the values shown in the graph to the side.

DIMENSIONS

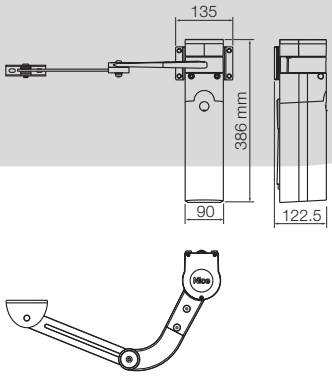

KOVOPOLOTOVARY.CZ

Nice

BiDi | Yubii | SOLEMYO | OPERA | BLUEBUS | 24V

Hopp

For swing gates with leaves up to 2.4 m, ideal for large columns

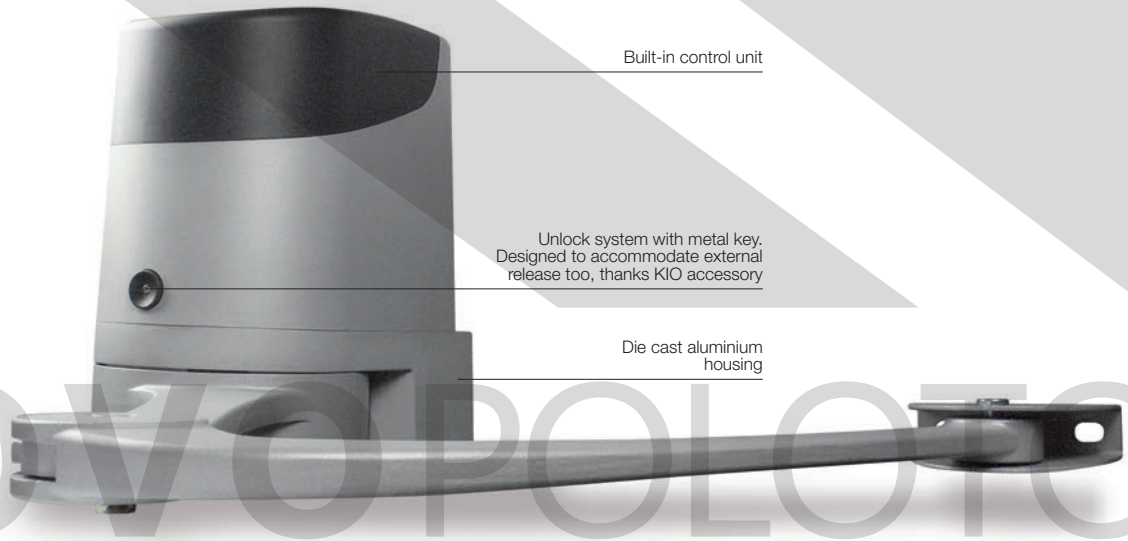

Ideal for intensive use.

Irreversible electromechanical 24 Vdc gear motor with articulated arm, surface mounted.

Two irreversible 24 Vdc versions with micrometric adjustment mechanical stops on opening and closing: with built-in control unit (HO7124) and without control unit (HO7224).

Powerful thanks to the 250 Nm torque.

Resistant and compact: 180 mm in width, ideal for any kind of post. Small shockproof body with aluminium base.

Sturdy, aluminium anti-shearing arm.

Easy to install: thanks to the new fixing bracket with quick connector for the motor. No welding.

Sophisticated electronics with the built-in control unit, ust 3 keys to manage all programming operations:

- obstacle detection and possibility of connecting to 8.2 KOhm sensitive edge, fototest;
- automatic fault diagnostics;
- automatic memorization of limit switches on opening and closing with self-learning function;
- possibility of configuring the stop input in self-learning mode, NO, NC and the latest generation 8.2 KOhm resistive sensitive edges;
- deceleration on opening and closing;
- simple connection of pairs of additional photocells;
- programming of pause time;
- pedestrian open and partial open;
- clutch with anti-crush safety feature.

Energy saving with no black outs: 3 standby modes to reduce mains consumption, or battery power consumption if connected to the Solemyo kit. Operation in the event of a power failure thanks to the optional batteries (PS124).

Everything under control: thanks to compatibility for operation with Opera BUS T4, the unit O-Viewcan be used to expand the options of programming, control and diagnostics of the automation on site and remotely.

Nice **BiDirectional products** indicate the status of the automations and confirm correct reception of the command.

Discover the complete range of BiDirectional products on page 176.

Yubii is the new Nice ecosystem that connects all the automations in the home.

Discover all the benefits of the Yubii system on page 170.

KOVOPOLOTOVARY.CZ

COMMON ACCESSORIES

CORE
Nice Wi-Fi-Radio Gateway.

Pc./Pack 1

IT4WIFI
Smart Wi-fi interface to manage gates and garage doors by smartphone (*).

Pc./Pack 1

POA3
Spare control unit, for HO7124.

Pc./Pack 1

PS124
24 V battery with integrated battery charger.

Pc./Pack 1

PLA10
Vertical 12 V electric lock.

Pc./Pack 1

PLA11
Horizontal 12 V electric lock.

Pc./Pack 1

KIO
Key-operated selector switch for low voltage contacts, with release mechanism for metal cord.

Pc./Pack 1

KA1
6 m cable release kit for KIO.

Pc./Pack 1

TS
Signboard.

Pc./Pack 1

SOLEMYO KIT
The solar power to automate gates, garage doors or barrier gates.

See page 229.

* Not compatible with the Solemyo kit and PS124

TECHNICAL SPECIFICATIONS

Code	Description	Pack/Pallet
HO7124	Irreversible 24 Vdc, complete with articulated arm and built-in control unit	12
HO7224	Irreversible 24 Vdc, complete with articulated arm without control unit	12

Code	HO7124	HO7224
ELECTRICAL DATA		
Power supply (Vac 50/60 Hz)	230	-
Power supply (Vdc)	-	24
Absorption (A)	1,3	4
Power (W)	280	100
PERFORMANCE DATA		
Speed (rpm)	1,68	
Torque (Nm)	250	
Work cycle (cycles/hour)	35	
DIMENSIONAL AND GENERAL DATA		
Protection level (IP)	54	
Working temp. (°C Min/Max)	-20 ÷ +50	
Dimensions (mm)	252x180x290 h	
Weight (kg)	9	6,5

UTILISATION LIMITS

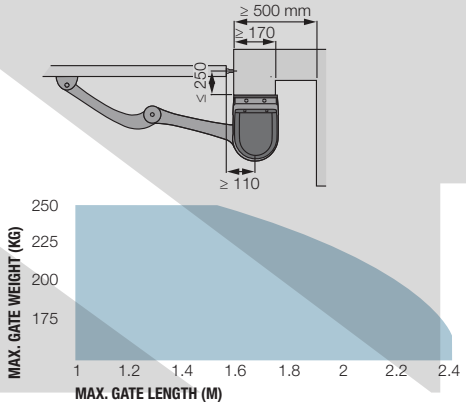

The shape, the height of the gate and the weather conditions can considerably reduce the values shown in the graph to the side.

DIMENSIONS

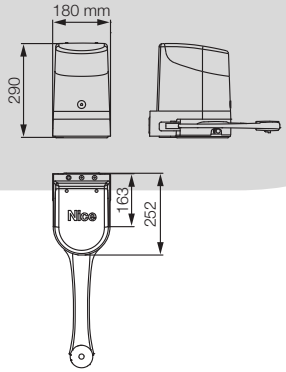

COMPATIBILITY TABLE WITH CONTROL SYSTEMS AND ACCESSORIES

	receiver				transmitter						photocells											flashing light		
Code	Built-in*	OXI	OXIBD	OXILR	ERA INTI	ERA ONE	ERA ONE BD	ERA ONE LR	ERA FLOR	NICEWAY	EPS	EPM	EPL	EPSB	EPMB	EPLB	EPMOW	F210	FT210	F210B	FT210B	ELAC	ELDC	WLT
HO7124		•	•	•	•	•	•	•	•	•				•	•	•	•			•			•	•

* Radio receiver incompatible with Opera system

KOVO POLOTOVARY.CZ

Nice

BiDi | Yubii | SOLEMYO | OPERA | BLUEBUS | 24V

Hoppkit BD

For swing gates with leaves up to 2.4 m, ideal for large columns

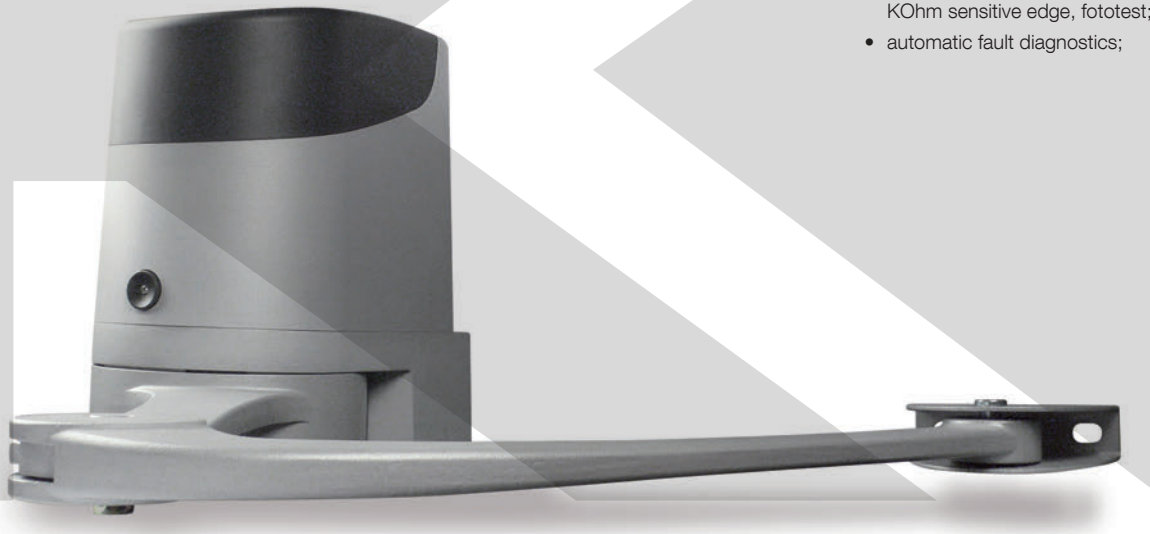

Ideal for intensive use.

Irreversible electromechanical 24 Vdc gear motor with articulated arm, surface mounted.

Two irreversible 24 Vdc versions with micrometric adjustment mechanical stops on opening and closing: with built-in control unit (HO7124) and without control unit (HO7224).

Powerful thanks to the 250 Nm torque.

Resistant and compact: 180 mm in width, ideal for any kind of post. Small shockproof body with aluminium base.

Sturdy, aluminium anti-shearing arm.

Easy to install: thanks to the new fixing bracket with quick connector for the motor. No welding.

Sophisticated electronics with the built-in control unit, ust 3 keys to manage all programming operations:

- obstacle detection and possibility of connecting to 8.2 KOhm sensitive edge, fototest;
- automatic fault diagnostics;
- automatic memorization of limit switches on opening and closing with self-learning function;
- possibility of configuring the stop input in self-learning mode, NO, NC and the latest generation 8.2 KOhm resistive sensitive edges;
- deceleration on opening and closing;
- simple connection of pairs of additional photocells;
- programming of pause time;
- pedestrian open and partial open;
- clutch with anti-crush safety feature.

Energy saving with no black outs: 3 standby modes to reduce mains consumption, or battery power consumption if connected to the Solemyo kit. Operation in the event of a power failure thanks to the optional batteries (PS124).

Everything under control: thanks to compatibility for operation with Opera BUS T4, the unit O-Viewcan be used to expand the options of programming, control and diagnostics of the automation on site and remotely.

Nice **BiDirectional products** indicate the status of the automations and confirm correct reception of the command.

Discover the complete range of BiDirectional products on page 176.

Yubii is the new Nice ecosystem that connects all the automations in the home.

Discover all the benefits of the Yubii system on page 170.

NEW

The kit contains:

HO7124 + HO7224
2 Electromechanical gearmotors, surface mounted; HO7124 (with control unit and OXIBD bidirectional radio receiver with connector included), HO7224 (without control unit).

ON3EBD
2 Transmitters 433.92 MHz, 3 channels, bidirectional

EPMB
1 Couple of external photocells designed for connection by Nice BlueBUS.

ELDC
1 LED flashing light with integrated aerial.

TS
1 Signboard.

KOVOPOLOTOVARY.CZ

COMMON ACCESSORIES

CORE
Nice Wi-Fi-Radio Gateway.

Pc./Pack 1

IT4WIFI
Smart Wi-fi interface to manage gates and garage doors by smartphone (*).

Pc./Pack 1

POA3
Spare control unit, for HO7124.

Pc./Pack 1

PS124
24 V battery with integrated battery charger.

Pc./Pack 1

PLA10
Vertical 12 V electric lock.

Pc./Pack 1

PLA11
Horizontal 12 V electric lock.

Pc./Pack 1

KIO
Key-operated selector switch for low voltage contacts, with release mechanism for metal cord.

Pc./Pack 1

KA1
6 m cable release kit for KIO.

Pc./Pack 1

SOLEMYO KIT
The solar power to automate gates, garage doors or barrier gates.

See page 229.

* Not compatible with the Solemyo kit and PS124

TECHNICAL SPECIFICATIONS

Code	Description	Pack/Pallet
HOPPBDKCE	Kit for automating swing gates with a leaf length of up to 2.4 m, 24 Vdc, surface mounted, with bidirectional technology	12

N.B. The content of the package may vary: consult the retailer.

Code	HO7124	HO7224
ELECTRICAL DATA		
Power supply (Vac 50/60 Hz)	230	-
Power supply (Vdc)	-	24
Absorption (A)	1,3	4
Power (W)	280	100
PERFORMANCE DATA		
Speed (rpm)	1,68	
Torque (Nm)	250	
Work cycle (cycles/hour)	35	
DIMENSIONAL AND GENERAL DATA		
Protection level (IP)	54	
Working temp. (°C Min/Max)	-20 ÷ +50	
Dimensions (mm)	252x180x290 h	
Weight (kg)	9	6,5

UTILISATION LIMITS

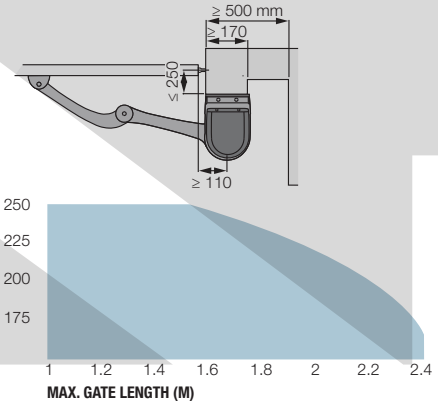

The shape, the height of the gate and the weather conditions can considerably reduce the values shown in the graph to the side.

DIMENSIONS

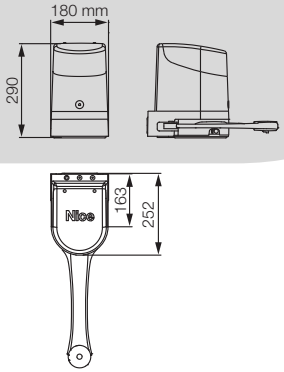

KOVOPOLOTOVARY.CZ

Nice

BiDi | Yubii | SOLEMYO | OPERA | BLUEBUS | 24V

Hyke

For swing gates with leafs of up to 3.5 m, including with large posts

Ideal for intensive use.

24 Vdc electromechanical gear motor with articulated arm, surface mounted, with magnetic encoder.

Reliability and durability over time: thanks to the housing in aluminium with polyester paint finish, resistant to atmospheric agents.

Safe: obstacle detection system and monitoring of the motor absorption during movement, self-diagnosis by means of a flashing light, courtesy LED light.

The latest generation optical and resistive 8.2 KOhm sensitive edges can also be connected.

Two irreversible 24 Vdc versionswith limit switches on opening and closing: with built-in control unit (HK7024) and without control unit (HK7224).

Practical and quick installation: the articulated arm is adjustable in length for maximum flexibility.

Simple and precise limit switch adjustment: mechanical stops and micrometric adjustment screws.

Easy to operate release lever: with metal lock and personalised Nice key. With provision for cable control.

Savings, respect for the environment, and autonomy: when connected to the buffer battery or Solemyo kit, consumption on standby is just 0.1 W.

No black out: with the optional batteries (PS124) housed inside the gear motor.

Built-in control unit (HK7024):

- simple programming, by means of a single key;
- automatic memorization of limit switches on opening and closing with self-learning function;
- automatic fault diagnostics;
- programming of pause time;
- pedestrian pass door;
- deceleration on opening and closing;
- obstacle detection with dual technology;
- provision for connection of latest generation resistive sensitive edges.

Nice **BiDirectional products** indicate the status of the automations and confirm correct reception of the command.

Discover the complete range of BiDirectional products on page 176.

Yubii is the new Nice ecosystem that connects all the automations in the home.

Discover all the benefits of the Yubii system on page 170.

KOVOPOLOTOVARY.CZ

COMMON ACCESSORIES

CORE
Nice Wi-Fi-Radio Gateway.

Pc./Pack 1

IBT4N
Interface for connecting the O-View programming unit.

Pc./Pack 1

IT4WIFI
Smart Wi-fi interface to manage gates and garage doors by smartphone (*).

Pc./Pack 1

HKA2
Spare control unit, for HK7024.

Pc./Pack 1

PS124
24 V battery with integrated battery charger.

Pc./Pack 1

PLA10
Vertical 12 V electric lock (required for gates longer than 3 m).

Pc./Pack 1

PLA11
Horizontal 12 V electric lock (required for gates longer than 3 m).

Pc./Pack 1

KIO
Key-operated selector switch for low voltage contacts, with release mechanism for metal cord.

Pc./Pack 1

KA1
6 m cable release kit for KIO.

Pc./Pack 1

TS
Signboard.

Pc./Pack 1

SOLEMYO KIT
The solar power to automate gates, garage doors or barrier gates.

See page 229.

* Not compatible with the Solemyo kit and PS124

TECHNICAL SPECIFICATIONS

Code	Description	Pack/Pallet
HK7024	Irreversible 24 Vdc, complete with articulated arm and built-in control unit	12
HK7224	Irreversible 24 Vdc, complete with articulated arm without control unit	12

Code	HK7024	HK7224
ELECTRICAL DATA		
Power supply (Vac 50/60 Hz)	230	-
Power supply (Vdc)	-	24
Absorption (A)	1,5	6
Power (W)	300	140
PERFORMANCE DATA		
Speed (rpm)	1,5	
Torque (Nm)	500	
Work cycle (cycles/hour)	40	
DIMENSIONAL AND GENERAL DATA		
Protection level (IP)	54	
Working temp. (°C Min/Max)	-20 ÷ +50	
Dimensions (mm)	290x210x320 h	
Weight (kg)	10,5	9,5

UTILISATION LIMITS

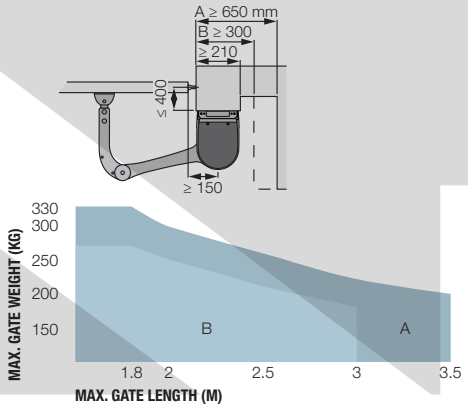

A Entire arm - **B** Reduced arm

The shape, the height of the gate and the weather conditions can considerably reduce the values shown in the graph to the side.

DIMENSIONS

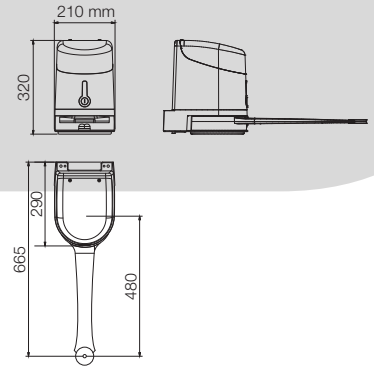

COMPATIBILITY TABLE WITH CONTROL SYSTEMS AND ACCESSORIES

	receiver				transmitter						photocells											flashing light		
Code	Built-in*	OXI	OXIBD	OXILR	ERA INTI	ERA ONE	ERA ONE BD	ERA ONE LR	ERA FLOR	NICEWAY	EPS	EPM	EPL	EPSB	EPMB	EPLB	EPMOW	F210	FT210	F210B	FT210B	ELAC	ELDC	WLT
HK7024		•	•	•	•	•	•	•	•	•				•	•	•	•			•			•	•

* Radio receiver incompatible with Opera system

KOVOPOLOVARY.CZ

Nice

BiDi | Yubii | SOLEMYO | OPERA | BLUEBUS | 24V

Hykekit BD

For swing gates with leafs of up to 3.5 m, including with large posts

Adjustable anti-crushing arm

Ideal for intensive use.

24 Vdc electromechanical gear motor with articulated arm, surface mounted, with magnetic encoder.

Reliability and durability over time: thanks to the housing in aluminium with polyester paint finish, resistant to atmospheric agents.

Safe: obstacle detection system and monitoring of the motor absorption during movement, self-diagnosis by means of a flashing light, courtesy LED light.

The latest generation optical and resistive 8.2 KOhm sensitive edges can also be connected.

Two irreversible 24 Vdc versionswith limit switches on opening and closing: with built-in control unit (HK7024) and without control unit (HK7224).

Practical and quick installation: the articulated arm is adjustable in length for maximum flexibility.

Simple and precise limit switch adjustment: mechanical stops and micrometric adjustment screws.

Easy to operate release lever: with metal lock and personalised Nice key. With provision for cable control.

Savings, respect for the environment, and autonomy: when connected to the buffer battery or Solemyo kit, consumption on standby is just 0.1 W.

No black out: with the optional batteries (PS124) housed inside the gear motor.

Built-in control unit (HK7024):

- simple programming, by means of a single key;
- automatic memorization of limit switches on opening and closing with self-learning function;
- automatic fault diagnostics;
- programming of pause time;
- pedestrian pass door;
- deceleration on opening and closing;
- obstacle detection with dual technology;
- provision for connection of latest generation resistive sensitive edges.

Nice **BiDirectional products** indicate the status of the automations and confirm correct reception of the command.

Discover the complete range of BiDirectional products on page 176.

Yubii is the new Nice ecosystem that connects all the automations in the home.

Discover all the benefits of the Yubii system on page 170.

NEW

The kit contains:

HK7024 + HK7224
2 Electromechanical gearmotors, surface mounted: HK7024 (with control unit and OXIBD bidirectional radio receiver with connector included), HK7224 (without control unit).

ON3EBD
2 Transmitters 433.92 MHz, 3 channels, bidirectional

EPMB
1 Couple of external photocells designed for connection by Nice BlueBUS.

ELDC
1 LED flashing light with integrated aerial.

TS
1 Signboard.

KOVOPOLOTOVARY.CZ

COMMON ACCESSORIES

CORE
Nice Wi-Fi-Radio Gateway.

Pc./Pack 1

IBT4N
Interface for connecting the O-View programming unit.

Pc./Pack 1

IT4WIFI
Smart Wi-fi interface to manage gates and garage doors by smartphone (*).

Pc./Pack 1

HKA2
Spare control unit, for HK7024.

Pc./Pack 1

PS124
24 V battery with integrated battery charger.

Pc./Pack 1

PLA10
Vertical 12 V electric lock (required for gates longer than 3 m).

Pc./Pack 1

PLA11
Horizontal 12 V electric lock (required for gates longer than 3 m).

Pc./Pack 1

KIO
Key-operated selector switch for low voltage contacts, with release mechanism for metal cord.

Pc./Pack 1

KA1
6 m cable release kit for KIO.

Pc./Pack 1

SOLEMYO KIT
The solar power to automate gates, garage doors or barrier gates.

See page 229.

* Not compatible with the Solemyo kit and PS124

TECHNICAL SPECIFICATIONS

Code	Description	Pack/Pallet
HYKEBDKCE	Kit for automating swing gates with a leaf length of up to 3,5 m, 24 Vdc, with articulated arm, surface mounted, with bidirectional technology	12

N.B. The content of the package may vary: consult the retailer.

Code	HK7024	HK7224
ELECTRICAL DATA		
Power supply (Vac 50/60 Hz)	230	-
Power supply (Vdc)	-	24
Absorption (A)	1,5	6
Power (W)	300	140
PERFORMANCE DATA		
Speed (rpm)	1,5	
Torque (Nm)	500	
Work cycle (cycles/hour)	40	
DIMENSIONAL AND GENERAL DATA		
Protection level (IP)	54	
Working temp. (°C Min/Max)	-20 ÷ +50	
Dimensions (mm)	290x210x320 h	
Weight (kg)	10,5	9,5

UTILISATION LIMITS

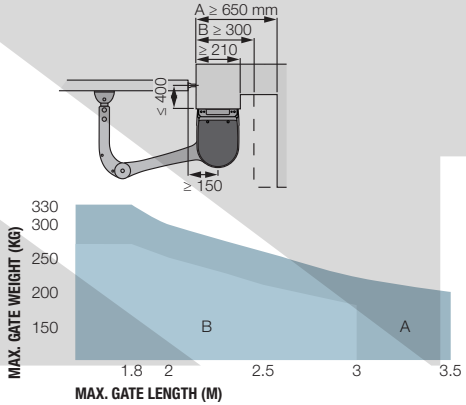

A Entire arm - **B** Reduced arm

The shape, the height of the gate and the weather conditions can considerably reduce the values shown in the graph to the side.

DIMENSIONS

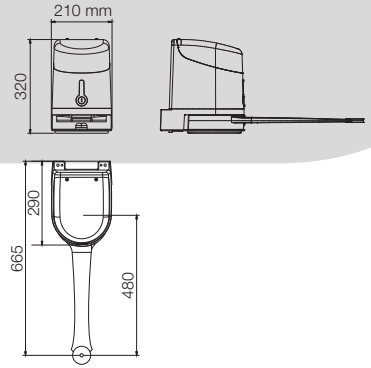

KOVO POLOTOVARY.CZ

Nice

BiDi | Yubii | SOLEMYO | OPERA | BLUEBUS | 24V | 230V

Hyppo 7000

For swing gates with leaves up to 3 m, ideal for large columns

Electromechanical gear motor, surface mounted, also in 24 Vdc version with magnetic encoder, with articulated arm.

Single model for right and left leaves.

Two irreversible versions, with 230 Vac (HY7005) and 24 Vdc (HY7024) power supplies with magnetic encoder.

Easy and quick to install: thanks to fewer connections and nothing welded to the gates.

Pre-wired, incorporated double limit-switch both during opening and closing (HY7005).

Long-lasting: solid metal mechanics.

Compact: shockproof bodywork with no sharp corners.

Recommended control units: Moonclever MC800 for HY7005; Moonclever MC824H for HY7024.

24 Vdc version with magnetic encoder. **Perfect for intensive use**, compatible with the control unit Moonclever MC824H:

- simple programming, by means of a single key;
- automatic memorization of limit switches on opening and closing with self-learning function;
- automatic fault diagnostics;
- programming of pause time;
- pedestrian pass door;
- deceleration on opening and closing;
- obstacle detection with dual technology;
- operation in event of power failure by means of optional rechargeable batteries (PS324);
- provision for connection of latest generation resistive sensitive edges.

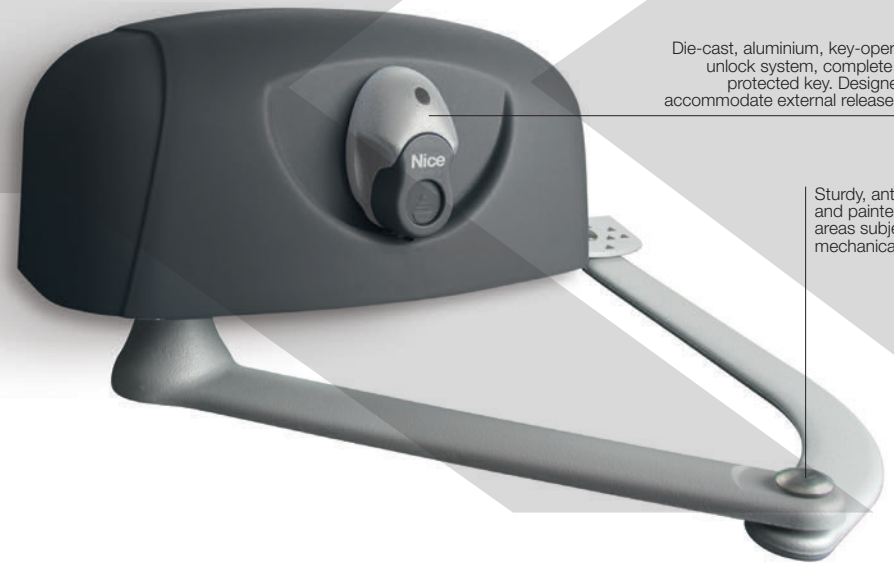

Die-cast, aluminium, key-operated unlock system, complete with protected key. Designed to accommodate external release, too

Sturdy, anti-shearing arm, galvanised and painted; strengthened in those areas subjected to greater mechanical stress

Nice **BiDirectional products** indicate the status of the automations and confirm correct reception of the command.

Discover the complete range of BiDirectional products on page 176.

Yubii is the new Nice ecosystem that connects all the automations in the home.

Discover all the benefits of the Yubii system on page 170.

DIMENSIONS

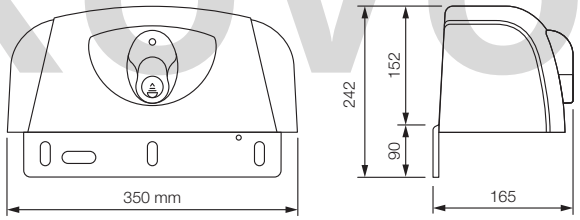

UTILISATION LIMITS

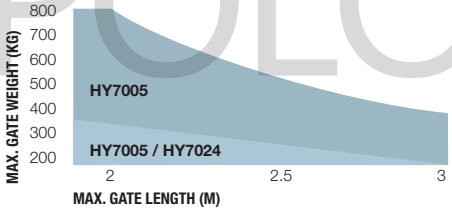

A Standard arm - **B** Arm with accessory HYA12

The shape, the height of the gate and the weather conditions can considerably reduce the values shown in the graph to the side.

Use in windy areas 230 Vac models.

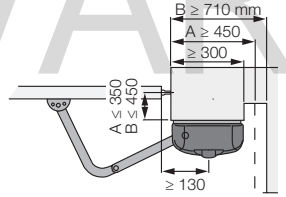

KOVO POLOTOVARY.CZ

COMMON ACCESSORIES

CORE
Nice Wi-Fi-Radio Gateway.

Pc./Pack 1

IBT4N
Interface for connecting the O-View programming unit.

Pc./Pack 1

IT4WIFI
Smart Wi-fi interface to manage gates and garage doors by smartphone (*).

Pc./Pack 1

HYA12
Longer articulated arm (see the layout).

Pc./Pack 1

PLA10
Vertical 12 V electric lock.

Pc./Pack 1

PLA11
Horizontal 12 V electric lock.

Pc./Pack 1

KIO
Key-operated selector switch for low voltage contacts, with release mechanism for metal cord.

Pc./Pack 1

KA1
6 m cable release kit for KIO.

Pc./Pack 1

TS
Signboard.

Pc./Pack 1

ACCESSORY FOR 24 V VERSION

PS324
24 V battery with integrated battery charger.

Pc./Pack 1

SOLEMYO KIT
The solar power to automate gates, garage doors or barrier gates.

See page 229.

* Not compatible with the Solemyo kit.

TECHNICAL SPECIFICATIONS

Code	Description	Pack/Pallet
HY7024	Irreversible, 24 Vdc, with magnetic encoder, with shear-proof articulated arm, galvanized and painted	16
HY7005	Irreversible, 230 Vac, with sturdy articulated shear-proof arm, galvanized and painted, with limit switch on opening and closing	16

Code	HY7024	HY7005
ELECTRICAL DATA		
Power supply (Vac 50 Hz)*	-	230
Power supply (Vdc)	24	-
Absorption (A)	5	1,2
Power (W)	120	258
PERFORMANCE DATA		
Speed (rpm)	2	1,7
Torque (Nm)	250	400
Work cycle (%)	80	30
DIMENSIONAL AND GENERAL DATA		
Protection level (IP)	43	
Working temp. (°C Min/Max)	-20 ÷ +50	
Dimensions (mm)	350x165x242 h	
Weight (kg)	13	

* 60 Hz version available on request.

COMPATIBILITY TABLE WITH CONTROL SYSTEMS AND ACCESSORIES

	control unit/receiver							transmitter						photocells										flashing light		
Code	MC200 / Built-in*	MC800 / OXI / OXIBD / OXILR	DPRO500 / OXI / OXIBD / OXILR	DPRO924 / OXI / OXIBD / OXILR	MC424L / Built-in* / OXI / OXIBD / OXILR	MC824H / OXI / OXIBD / OXILR	MC824HR / OXI / OXIBD / OXILR	ERA INTI	ERA ONE	ERA ONE BD	ERA ONE LR	ERA FLOR	NICEWAY	EPS	EPM	EPL	EPSB	EPMB	EPLB	EPMOW	F210	FT210	F210B	FT210B	ELAC	ELDC	WLT
HY7024						•		•	•	•	•	•	•				•	•	•	•			•		•	•
HY7005		•						•	•	•	•	•	•	•	•	•					•	•			•		

* Radio receiver incompatible with Opera system

KOVOPOLOTOVARY.CZ

Nice

BiDi | Yubii | SOLEMYO | OPERA | BLUEBUS | 24V

S-Fab

For swing gates with leaves up to 2.3 m, underground installation, ultra compact

Foundation box with cataphoresis paint finish

Waterproof, with IP67 protection rating

Irreversible electromechanical 24 Vdc gear motor, ideal for intensive use

Sturdy and discreet: compact foundation box with a height of only 81 mm.

Steel with cataphoresis paint finish guarantees optimal resistance to corrosion, and thickness of 2.5 mm guarantees strength. All this in just 52 mm of protrusion from the ground.

Practical and quick installation: thanks to the exit lever on the gear motor attached directly on the leaf.

Opening up to 180° as standard.

Reliable and sturdy: the gear motor, in IP67 pressure die cast aluminium, suspended inside the housing to enable drainage of any deposits, ensures optimal water resistance.

Load-bearing foundation box with adjustable mechanical stops on opening and closing: the gear motor can also be installed later as required.

Practical release easy to operate from inside and outside, acting directly on the gear motor, easy to operate by means of the special key.

SFAB2024, compatible with the control unit Moonclever MC424L, and for operation with Solemyo and Opera systems:

- built-in radio receiver;
- simple programming, by means of a single key;
- automatic memorization of limit switches on opening and closing with self-learning function;
- programming of pause time;
- pedestrian pass door;
- deceleration on opening and closing;
- obstacle detection system;
- provision for connection of latest generation resistive sensitive edges;
- operation in event of power failure by means of optional rechargeable batteries (PS124) with compartment in control unit.

SFAB2124 with magnetic encoder, compatible with control unit Moonclever MC824H, with BlueBUS technology, and compatible for operation with Solemyo and Opera systems:

- simple programming, by means of a single key;
- automatic memorization of limit switches on opening and closing with self-learning function;
- automatic fault diagnostics;
- with output for courtesy light and maintenance indicator;
- speed settings on 5 levels;
- separate and configurable inputs for Step by Step, Open and Close;
- programming of pause time;
- pedestrian pass door;
- deceleration on opening and closing;
- obstacle detection with dual technology;
- provision for connection of latest generation resistive sensitive edges;
- operation in event of power failure by means of optional rechargeable batteries (PS324).

Nice **BiDirectional products** indicate the status of the automations and confirm correct reception of the command.

Discover the complete range of BiDirectional products on page 176.

Yubii is the new Nice ecosystem that connects all the automations in the home.

Discover all the benefits of the Yubii system on page 170.

KOVOPOLOTOVARY.CZ

COMMON ACCESSORIES

CORE
Nice Wi-Fi-Radio Gateway.

Pc./Pack 1

IBT4N
Interface for connecting the O-View programming unit.

Pc./Pack 1

IT4WIFI
Smart Wi-fi interface to manage gates and garage doors by smartphone (*).

Pc./Pack 1

PS124
24 V battery with integrated battery charger.

Pc./Pack 1

PS324
24 V battery with integrated battery charger.

Pc./Pack 1

PLA10
Vertical 12 V electric lock.

Pc./Pack 1

PLA11
Horizontal 12 V electric lock.

Pc./Pack 1

TS
Signboard.

Pc./Pack 1

SOLEMYO KIT
The solar power to automate gates, garage doors or barrier gates.

See page 229.

* Not compatible with the Solemyo kit, PS124 and PS324

TECHNICAL SPECIFICATIONS

Code	Description	Pack/Pallet
SFAB2024	Irreversible, 24 Vdc	18
SFAB2124	Irreversible 24 Vdc version with magnetic encoder	18
SFABBOX	Externally foundation box, with cataphoresis paint finish. Complete with leaf coupling lever and mechanical stops on opening and closing	18

Code	SFAB2024	SFAB2124
ELECTRICAL DATA		
Power supply (Vdc)	24	
Absorption (A)	5	
Power (W)	120	
PERFORMANCE DATA		
Speed (rpm)	1,25	
Torque (Nm)	250	
Work cycle (cycles/hour)*	60	
DIMENSIONAL AND GENERAL DATA		
Protection level (IP)	67	
Working temp. (°C Min/Max)	-20 ÷ +50	
Dimensions (mm)	235x206x96.5 h	
Weight (kg)	6	

* The indicated value has to be halved if the opening is up to 180°

UTILISATION LIMITS

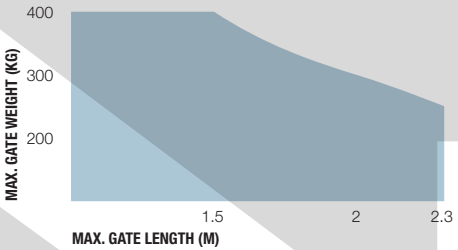

The shape, the height of the gate and the weather conditions can considerably reduce the values shown in the graph to the side.

DIMENSIONS

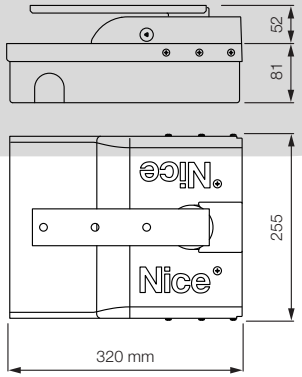

COMPATIBILITY TABLE WITH CONTROL SYSTEMS AND ACCESSORIES

	control unit/receiver							transmitter						photocells									flashing light		
Code	MC200 / Built-in*	MC800 / OXI / OXIBD / OXILR	DPRO500 / OXI / OXIBD / OXILR	DPRO924 / OXI / OXIBD / OXILR	MC424L / Built-in* / OXI / OXIBD / OXILR	MC824H / OXI / OXIBD / OXILR	MC824HR / OXI / OXIBD / OXILR	ERA INTI	ERA ONE	ERA ONE BD	ERA ONE LR	ERA FLOR	NICEWAY	EPS	EPM	EPL	EPSB	EPMB	EPLB	EPMOW	F210	FT210	F210B	FT210B	ELAC	ELDC	WLT
SFAB2024					•			•	•	•	•	•	•	•	•	•					•	•				•	
SFAB2124						•		•	•	•	•	•	•				•	•	•	•			•				•

* Radio receiver incompatible with Opera system

KOVOPOLOPOVARY.CZ

Nice

BiDi | Yubii | SOLEMYO | OPERA | 24V

S-Fabkit 2024 BD

For swing gates with leaves up to 2.3 m, underground installation, ultra compact

24 Vdc irreversible electromechanical gear motor.

Sturdy and discreet: compact foundation box with a height of only 81 mm.

Steel with cataphoresis paint finish guarantees optimal resistance to corrosion, and thickness of 2.5 mm guarantees strength. All this in just 52 mm of protrusion from the ground.

Practical and quick installation: thanks to the exit lever on the gear motor attached directly on the leaf.

Mechanical limit switches adjustable on opening and closing.

Opening up to 180° as standard.

Reliable and sturdy: the gear motor, in IP67 pressure die cast aluminium, suspended inside the housing to enable drainage of any deposits, ensures optimal water resistance.

Practical release easy to operate from inside and outside, acting directly on the gear motor, easy to operate by means of the special key.

New control unit Moonclever MC424L:

- built-in radio receiver;
- simple programming, by means of a single key;
- automatic memorization of limit switches on opening and closing with self-learning function;
- programming of pause time;
- pedestrian pass door;
- deceleration on opening and closing;
- obstacle detection system;
- provision for connection of latest generation resistive sensitive edges;
- operation in event of power failure by means of optional rechargeable batteries (PS124) with compartment in control unit.

Nice **BiDirectional products** indicate the status of the automations and confirm correct reception of the command.

Discover the complete range of BiDirectional products on page 176.

Yubii is the new Nice ecosystem that connects all the automations in the home.

Discover all the benefits of the Yubii system on page 170.

NEW

The kit contains:

SFAB2024
2 Gear motors.

SFABBOX
2 Foundation boxes.

ON3EBD
2 Transmitters 433.92 MHz, 3 channels, bidirectional

MC424L
1 Control unit with built-in radio receiver and OXIBD bidirectional radio receiver with connector included.

EPM
1 Pair of photocells for outdoor installation

ELDC
1 LED flashing light with integrated aerial.

TS
1 Signboard.

KOVOPOLOTOVARY.CZ

COMMON ACCESSORIES

CORE
Nice Wi-Fi-Radio Gateway.

Pc./Pack 1

IBT4N
Interface for connecting the O-View programming unit.

Pc./Pack 1

IT4WIFI
Smart Wi-fi interface to manage gates and garage doors by smartphone (*).

Pc./Pack 1

PS124
24 V battery with integrated battery charger.

Pc./Pack 1

PLA10
Vertical 12 V electric lock.

Pc./Pack 1

PLA11
Horizontal 12 V electric lock.

Pc./Pack 1

SOLEMYO KIT
The solar power to automate gates, garage doors or barrier gates.

See page 229.

TECHNICAL SPECIFICATIONS

Code	Description	Pack/Pallet
SFAB2024BDKCE	Kit for automating swing gates with a leaf length of up to 2.3 m, 24 Vdc, underground installation, with bidirectional technology	12

N.B. The content of the package may vary: consult the retailer.

Code	SFAB2024
ELECTRICAL DATA	
Power supply (Vdc)	24
Absorption (A)	5
Power (W)	120
PERFORMANCE DATA	
Speed (rpm)	1,25
Torque (Nm)	250
Work cycle (cycles/hour)*	60
DIMENSIONAL AND GENERAL DATA	
Protection level (IP)	67
Working temp. (°C Min/Max)	-20 ÷ +50
Dimensions (mm)	235x206x96.5 h
Weight (kg)	6

* The indicated value has to be halved if the opening is up to 180°

UTILISATION LIMITS

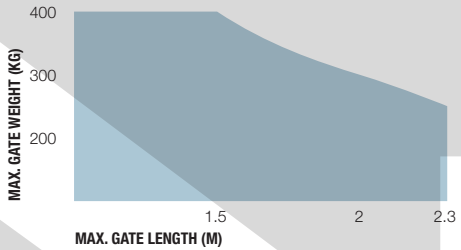

The shape, the height of the gate and the weather conditions can considerably reduce the values shown in the graph to the side.

DIMENSIONS

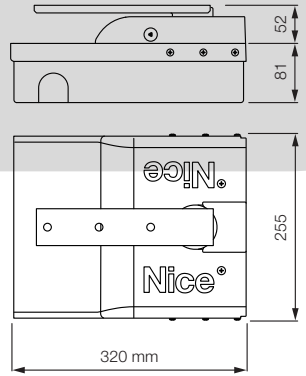

KOVOPOLOTOVARY.CZ

* Not compatible with the Solemyo kit and PS124

Nice

BiDi | Yubii | SOLEMYO | OPERA | BLUEBUS | 24V

S-Fabkit 2124 BD

For swing gates with leaves up to 2.3 m, underground installation, ultra compact

Irreversible electromechanical gear motor 24 Vdc with magnetic encoder.

Sturdy and discreet: compact foundation box with a height of only 81 mm.

Steel with cataphoresis paint finish guarantees optimal resistance to corrosion, and thickness of 2.5 mm guarantees strength. All this in just 52 mm of protrusion from the ground.

Practical and quick installation: thanks to the exit lever on the gear motor attached directly on the leaf.

Mechanical limit switches adjustable on opening and closing.

Opening up to 180° as standard.

Reliable and sturdy: the gear motor, in IP67 pressure die cast aluminium, suspended inside the housing to enable drainage of any deposits, ensures optimal water resistance.

Practical release easy to operate from inside and outside, acting directly on the gear motor, easy to operate by means of the special key.

Control unit Moonclever MC824H, with BlueBUS technology, and compatible for operation with Solemyo and Opera systems:

- easy to programme;
- automatic memorization of limit switches on opening and closing with self-learning function;
- automatic fault diagnostics;
- programming of pause time;
- pedestrian pass door;
- deceleration on opening and closing;
- obstacle detection with dual technology;
- operation in event of power failure by means of optional rechargeable batteries (PS324);
- provision for connection of latest generation resistive sensitive edges.

Nice **BiDirectional products** indicate the status of the automations and confirm correct reception of the command.

Discover the complete range of BiDirectional products on page 176.

Yubii is the new Nice ecosystem that connects all the automations in the home.

Discover all the benefits of the Yubii system on page 170.

NEW

The kit contains:

SFAB2124
2 Gear motors.

SFABBOX
2 Foundation boxes.

ON3EBD
2 Transmitters 433.92 MHz, 3 channels, bidirectional

MC824H
1 Control unit with OXIBD bidirectional radio receiver with connector included.

EPMB
1 Couple of external photocells designed for connection by Nice BlueBUS.

ELDC
1 LED flashing light with integrated aerial.

TS
1 Signboard.

KOVOPLOTOVARY.CZ

COMMON ACCESSORIES

CORE
Nice Wi-Fi-Radio Gateway.

Pc./Pack 1

IBT4N
Interface for connecting the O-View programming unit.

Pc./Pack 1

IT4WIFI
Smart Wi-fi interface to manage gates and garage doors by smartphone (*).

Pc./Pack 1

PS324
24 V battery with integrated battery charger.

Pc./Pack 1

PLA10
Vertical 12 V electric lock.

Pc./Pack 1

PLA11
Horizontal 12 V electric lock.

Pc./Pack 1

SOLEMYO KIT
The solar power to automate gates, garage doors or barrier gates.

See page 229.

TECHNICAL SPECIFICATIONS

Code	Description	Pack/Pallet
SFAB2124BDKCE	Kit for automating swing gates with a leaf length of up to 2.3 m, 24 Vdc, underground installation, with bidirectional technology	12

N.B. The content of the package may vary: consult the retailer.

Code	SFAB2124
ELECTRICAL DATA	
Power supply (Vdc)	24
Absorption (A)	5
Power (W)	120
PERFORMANCE DATA	
Speed (rpm)	1,25
Torque (Nm)	250
Work cycle (cycles/hour)*	60
DIMENSIONAL AND GENERAL DATA	
Protection level (IP)	67
Working temp. (°C Min/Max)	-20 ÷ +50
Dimensions (mm)	235x206x96.5 h
Weight (kg)	6

* The indicated value has to be halved if the opening is up to 180°

UTILISATION LIMITS

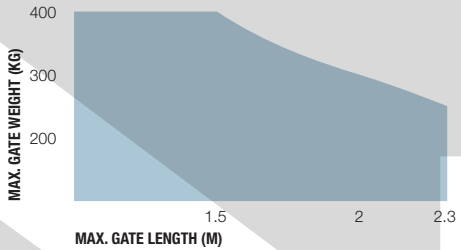

The shape, the height of the gate and the weather conditions can considerably reduce the values shown in the graph to the side.

DIMENSIONS

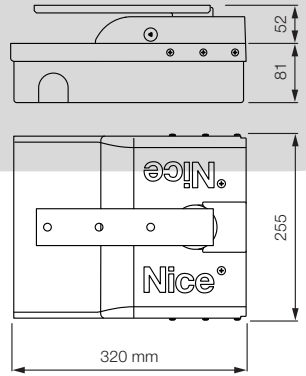

* Not compatible with the Solemyo kit and PS324

KOVOPOLOTOVARY.CZ

Nice

BiDi | Yubii | SOLEMYO | OPERA | BLUEBUS | 24V | 230V

M-Fab

For swing gates with leaves up to 3 m, underground installation

Irreversible electromechanical gear motor, also available in 24 Vdc versions with magnetic encoder.

3 types of electromechanical gear motors M-Fab.

Foundation boxes externally chamfered, Fab Box, with mechanical stop on opening:

- **in stainless steel** (MFABBOXI), ideal for use in extreme conditions;
- **with the cataphoresis paint finish** (MFABBOX), highly resistant to corrosion.

Reliable and resistant: motors made up of solid internal parts in metal. New IP67 waterproof die cast aluminium.

Total freedom of choice: release from inside and outside, two key-operated models or freely compatible lever version and easily activated with just one hand.

Simple to use: mechanical stop system on closure. Standard opening max. 110°, optional opening 360°.

Totally compatible with the previous Metro series.

Recommended control units: Moonclever MC800 for MFAB3000 and MFAB3000L; Moonclever MC824H for MFAB3024.

24 Vdc version with magnetic encoder.

Perfect for intensive use, compatible with the control unit Moonclever MC824H:

- simple programming, by means of a single key;
- automatic memorization of limit switches on opening and closing with self-learning function;
- automatic fault diagnostics;
- programming of pause time;
- pedestrian pass door;
- deceleration on opening and closing;
- obstacle detection with dual technology;
- operation in event of power failure by means of optional rechargeable batteries (PS324);
- provision for connection of latest generation resistive sensitive edges.

Nice **BiDirectional products** indicate the status of the automations and confirm correct reception of the command.

Discover the complete range of BiDirectional products on page 176.

Yubii is the new Nice ecosystem that connects all the automations in the home.

Discover all the benefits of the Yubii system on page 170.

DIMENSIONS

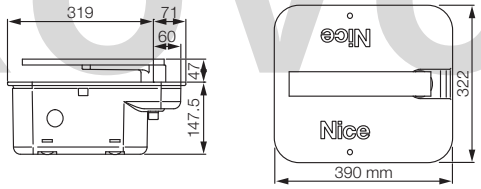

UTILISATION LIMITS

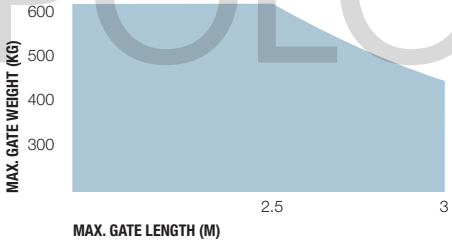

The shape, the height of the gate and the weather conditions can considerably reduce the values shown in the graph to the side.

Use in windy areas 230 Vac models.

KOVO POLOTOVARY.CZ

COMMON ACCESSORIES

CORE
Nice Wi-Fi-Radio Gateway.

Pc./Pack 1

IBT4N
Interface for connecting the O-View programming unit.

Pc./Pack 1

IT4WIFI
Smart Wi-fi interface to manage gates and garage doors by smartphone (*).

Pc./Pack 1

PS324
24 V battery with integrated battery charger.

Pc./Pack 1

MEA2
Key unlock system.

Pc./Pack 1

MEA3
Lever-type key unlock system to use when system is installed on surfaces such as sand or earth.

Pc./Pack 1

MEA5
Lever-type unlock key.

Pc./Pack 4

MEA6
Limit switch bracket, for installations where box embedding in concrete is not possible.

Pc./Pack 4

MEA1
Accessory for opening up to 360° for gates max. 2.5 m in length.

Pc./Pack 4

PLA10
Vertical 12 V electric lock.

Pc./Pack 1

PLA11
Horizontal 12 V electric lock.

Pc./Pack 1

TS
Signboard.

Pc./Pack 1

TECHNICAL SPECIFICATIONS

Code	Description	Pack/Pallet
MFAB3024	Irreversible, 24 Vdc, with magnetic encoder, complete with connecting lever and mechanical stop for the closing manoeuvre	18
MFAB3000	Irreversible, 230 Vac, increased speed, grease lubrication, complete with connecting lever and mechanical stop for the closing manoeuvre	18
MFAB3000L	Irreversible, 230 Vac, cruising speed, grease lubrication, complete with connecting lever and mechanical stop for the closing manoeuvre	18

Code	Description	Pack/Pallet
MFABBOXI	Externally chamfered foundation box in stainless steel with mechanical stop on opening	20
MFABBOX	Externally chamfered foundation box with cataphoresis finish with mechanical stop on opening	20

Note: key release mechanism, freely compatible with selection of models MEA2 and MEA3 motor.

Code	MFAB3024	MFAB3000	MFAB3000L
ELECTRICAL DATA			
Power supply (Vac 50 Hz)*	-	230	
Power supply (Vdc)	24	-	
Absorption (A)	5	1,2	1,3
Power (W)	120	250	300
PERFORMANCE DATA			
Speed (rpm)	1,4	1,14	0,8
Torque (Nm)	250	300	250
Work cycle (cycles/hour)**	76	30	20
DIMENSIONAL AND GENERAL DATA			
Protection level (IP)	67		
Working temp. (°C Min/Max)	-20 ÷ +50		
Dimensions (mm)	390x322x194.5 h		
Weight (kg)	11		

* 60 Hz version available on request. **The indicated value has to be halved if the opening is up to 180°.

COMPATIBILITY TABLE WITH CONTROL SYSTEMS AND ACCESSORIES

	control unit/receiver							transmitter						photocells										flashing light		
Code	MC200 / Built-in*	MC800 / OXI / OXIBD / OXILR	DPR0500 / OXI / OXIBD / OXILR	DPR0924 / OXI / OXIBD / OXILR	MC424L / Built-in* / OXI / OXIBD / OXILR	MC824H / OXI / OXIBD / OXILR	MC824HR / OXI / OXIBD / OXILR	ERA INTI	ERA ONE	ERA ONE BD	ERA ONE LR	ERA FLOR	NICEWAY	EPS	EPM	EPL	EPSB	EPMB	EPLB	EPMOW	F210	FT210	F210B	FT210B	ELAC	ELDC	WLT
MFAB3024						•		•	•	•	•	•	•				•	•	•	•			•			•	•
MFAB3000		•						•	•	•	•	•	•	•	•	•					•	•			•		
MFAB3000L		•						•	•	•	•	•	•	•	•	•					•	•			•		

* Radio receiver incompatible with Opera system

SOLEMYO KIT
The solar power to automate gates, garage doors or barrier gates. See page 229.

* Not compatible with the Solemyo kit and PS324

KOVOPOLOTOVARY.CZ

Nice

BiDi | Yubii | SOLEMYO | OPERA | BLUEBUS | 24V | 230V

L-Fab

For swing gates with leaves up to 4 m, underground installation

Irreversible electromechanical gear motor, also available in 24 Vdc versions with magnetic encoder and mechanical stop.

Foundation boxes with mechanical stop on opening:

- **in stainless steel** (LFABBOX4I), ideal for use in extreme conditions;
- **with the cataphoresis paint finish** (LFABBOX4), highly resistant to corrosion.

Total freedom of choice: release from inside and outside, two key-operated models or freely compatible lever version and easily activated with just one hand.

Simple installation: built-in mechanical stop system on closure. Standard opening max. 110°, optional opening 360°.

Ideal for intensive use, LFAB4024 model is compatible with the control unit Moonclever MC824H, with BlueBUS technology, Solemyo and Opera systems:

- simple programming, by means of a single key;
- automatic memorization of limit switches on opening and closing with self-learning function;
- automatic fault diagnostics;
- programming of pause time;
- pedestrian pass door;
- deceleration on opening and closing;
- obstacle detection with dual technology;
- operation in event of power failure by means of optional rechargeable batteries (PS324);
- provision for connection of latest generation resistive sensitive edges.

LFAB4000 model is compatible with the control unit Moonclever MC800.

Nice **BiDirectional products** indicate the status of the automations and confirm correct reception of the command.

Discover the complete range of BiDirectional products on page 176.

Yubii is the new Nice ecosystem that connects all the automations in the home.

Discover all the benefits of the Yubii system on page 170.

DIMENSIONS

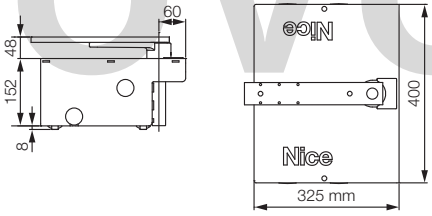

UTILISATION LIMITS

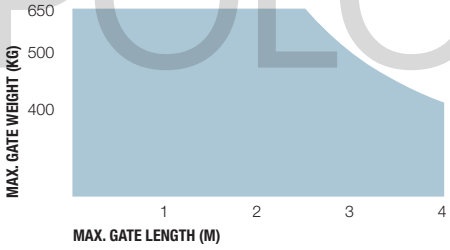

The shape, the height of the gate and the weather conditions can considerably reduce the values shown in the graph to the side.

Use in windy areas 230 Vac models.

KOVO POLOTOVARY.CZ

COMMON ACCESSORIES

CORE
Nice Wi-Fi-Radio Gateway.

Pc./Pack 1

IBT4N
Interface for connecting the O-View programming unit.

Pc./Pack 1

IT4WIFI
Smart Wi-fi interface to manage gates and garage doors by smartphone (*).

Pc./Pack 1

BMA3
Lever-type key unlock system.

Pc./Pack 1

MEA5
Lever-type unlock key.

Pc./Pack 4

BMA1
Accessory for opening up to 360° for gates max. 3.5 m in length.

Pc./Pack 1

BMA2
Adaptors for a dual motor automation, compatible with the majority of foundation boxes on the market.

Pc./Pack 4

PLA10
Vertical 12 V electric lock (required for gates longer than 3 m).

Pc./Pack 1

PLA11
Horizontal 12 V electric lock (required for gates longer than 3 m).

Pc./Pack 1

TS
Signboard.

Pc./Pack 1

ACCESSORY FOR 24 V VERSION

PS324
24 V battery with integrated battery charger.

Pc./Pack 1

SOLEMYO KIT
The solar power to automate gates, garage doors or barrier gates.

See page 229.

* Not compatible with the Solemyo kit and PS324

TECHNICAL SPECIFICATIONS

Code	Description	Pack/Pallet
LFAB4000	Irreversible, 230 Vac, with mechanical stop on closing	18
LFAB4024	Irreversible, 24 Vdc, with magnetic encoder, with mechanical stop on closing	18

Code	Description	Pack/Pallet
LFABB0X4	Electrophoretic painted foundation box with mechanical limit switch in opening. Complete with leaf attachment lever	18
LFABB0X4I	Stainless steel foundation box with mechanical limit switch in opening. Complete with leaf attachment lever	18

Note: key release mechanism, freely compatible with selection of models MEA2 and MEA3 motor.

Code	LFAB4024	LFAB4000
ELECTRICAL DATA		
Power supply (Vac 50/60 Hz)*	-	230
Power supply (Vdc)	24	-
Absorption (A)	5	1,5
Power (W)	120	340
PERFORMANCE DATA		
Speed (rpm)	1	0,8
Torque (Nm)	300	500
Work cycle (cycles/hour)**	60	20
DIMENSIONAL AND GENERAL DATA		
Protection level (IP)	67	
Working temp. (°C Min/Max)	-20 ÷ +50	
Dimensions (mm)	400x325x152 h	
Weight (kg)	12,5	14,3

* With foundation box. ** The indicated value has to be halved if the opening is up to 180° - by using the BMA1 accessory.

Foundation boxes	LFABB0X4
Weight (kg)	14,4

COMPATIBILITY TABLE WITH CONTROL SYSTEMS AND ACCESSORIES

	control unit/receiver							transmitter						photocells										flashing light		
Code	MC200 / Built-in*	MC800 / OXI / OXIBD / OXILR	DPRO500 / OXI / OXIBD / OXILR	DPRO924 / OXI / OXIBD / OXILR	MC424L / Built-in* / OXI / OXIBD / OXILR	MC824H / OXI / OXIBD / OXILR	MC824HR / OXI / OXIBD / OXILR	ERA INTI	ERA ONE	ERA ONE BD	ERA ONE LR	ERA FLOR	NICEWAY	EPS	EPM	EPL	EPSB	EPMB	EPLB	EPMOW	F210	FT210	F210B	FT210B	ELAC	ELDC	WLT
LFAB4000		•						•	•	•	•	•	•	•	•	•					•	•			•		
LFAB4024						•		•	•	•	•	•	•				•	•	•	•			•			•	•

* Radio receiver incompatible with Opera system

KOVOPOLOTOVARY.CZ

Nice

BiDi | Yubii | SOLEMYO | OPERA | BLUEBUS | 24V

Big-Fab

For swing gates with leaves up to 5 m, underground installation

Irreversible electromechanical gear motor, 24 Vdc with magnetic encoder and mechanical stop.

Foundation boxes with mechanical stop on opening:

- **in stainless steel** (BFABBOXI), ideal for use in extreme conditions;
- **with the cataphoresis paint finish** (BFABBOX), highly resistant to corrosion.

Total freedom of choice: release from inside and outside, two key-operated models or freely compatible lever version and easily activated with just one hand.

Simple to use: built-in mechanical stop system on closure. Standard opening max. 110°, optional opening 360°.

Ideal for intensive use, compatible with the control unit Moonclever MC824H:

- simple programming, by means of a single key;
- automatic memorization of limit switches on opening and closing with self-learning function;
- automatic fault diagnostics;
- programming of pause time;
- pedestrian pass door;
- deceleration on opening and closing;
- obstacle detection with dual technology;
- operation in event of power failure by means of optional rechargeable batteries (PS324);
- provision for connection of latest generation resistive sensitive edges.

Even more reliabile and resistent

Waterproof, with IP67 protection rating

Nice **BiDirectional products** indicate the status of the automations and confirm correct reception of the command.

Discover the complete range of BiDirectional products on page 176.

Yubii is the new Nice ecosystem that connects all the automations in the home.

Discover all the benefits of the Yubii system on page 170.

DIMENSIONS

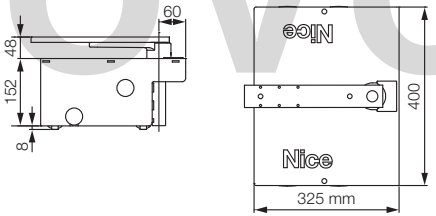

UTILISATION LIMITS

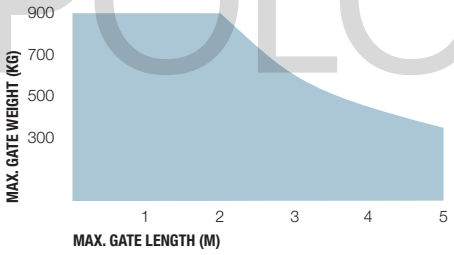

The shape, the height of the gate and the weather conditions can considerably reduce the values shown in the graph to the side.

KOVO POLOTOVARY.CZ

COMMON ACCESSORIES

CORE
Nice Wi-Fi-Radio Gateway.

Pc./Pack 1

IBT4N
Interface for connecting the O-View programming unit.

Pc./Pack 1

IT4WIFI
Smart Wi-fi interface to manage gates and garage doors by smartphone (*).

Pc./Pack 1

PS324
24 V battery with integrated battery charger.

Pc./Pack 1

BMA3
Lever-type key unlock system.

Pc./Pack 1

MEA5
Lever-type unlock key.

Pc./Pack 4

BMA1
Accessory for opening up to 360° for gates max. 3.5 m in length.

Pc./Pack 1

BMA2
Adaptors for a dual motor automation, compatible with the majority of foundation boxes on the market.

Pc./Pack 4

PLA10
Vertical 12 V electric lock (required for gates longer than 3 m).

Pc./Pack 1

PLA11
Horizontal 12 V electric lock (required for gates longer than 3 m).

Pc./Pack 1

TS
Signboard.

Pc./Pack 1

SOLEMYO KIT
The solar power to automate gates, garage doors or barrier gates.

See page 229.

* Not compatible with the Solemyo kit and PS324

TECHNICAL SPECIFICATIONS

Code	Description	Pack/Pallet
BFAB5024	Irreversible, 24 Vdc, with magnetic encoder, with mechanical stop on closing	18

Code	Description	Pack/Pallet
BFABBOX	Foundation box, with cataphoresis paint finish, with built-in mechanical stop on opening	18
BFABBOXI	Stainless steel foundation box, with built-in mechanical stop on opening	18

Note: key release mechanism, freely compatible with selection of models MEA2 and MEA3 motor.

Code	BFAB5024
ELECTRICAL DATA	
Power supply (Vdc)	24
Absorption (A)	7
Power (W)	170
PERFORMANCE DATA	
Speed (rpm)	0,8
Torque (Nm)	400
Work cycle (cycles/hour)**	45
DIMENSIONAL AND GENERAL DATA	
Protection level (IP)	67
Working temp. (°C Min/Max)	-20 ÷ +50
Dimensions (mm)*	400x325x152 h
Weight (kg)	13,3

* With foundation box. ** The indicated value has to be halved if the opening is up to 180° - by using the BMA1 accessory.

Foundation boxes	BFABBOX
Weight (kg)	20,3

COMPATIBILITY TABLE WITH CONTROL SYSTEMS AND ACCESSORIES

	control unit/receiver							transmitter						photocells										flashing light		
Code	MC200 / Built-in*	MC800 / OXI / OXIBD / OXILR	DPR0500 / OXI / OXIBD / OXILR	DPR0924 / OXI / OXIBD / OXILR	MC424L / Built-in* / OXI / OXIBD / OXILR	MC824H / OXI / OXIBD / OXILR	MC824HR / OXI / OXIBD / OXILR	ERA INTI	ERA ONE	ERA ONE BD	ERA ONE LR	ERA FLOR	NICEWAY	EPS	EPM	EPL	EPSB	EPMB	EPLB	EPMOW	F210	FT210	F210B	FT210B	ELAC	ELDC	WLT
BFAB5024						•		•	•	•	•	•	•				•	•	•	•			•			•	•

* Radio receiver incompatible with Opera system

KOVO POLOTOVARY.CZ

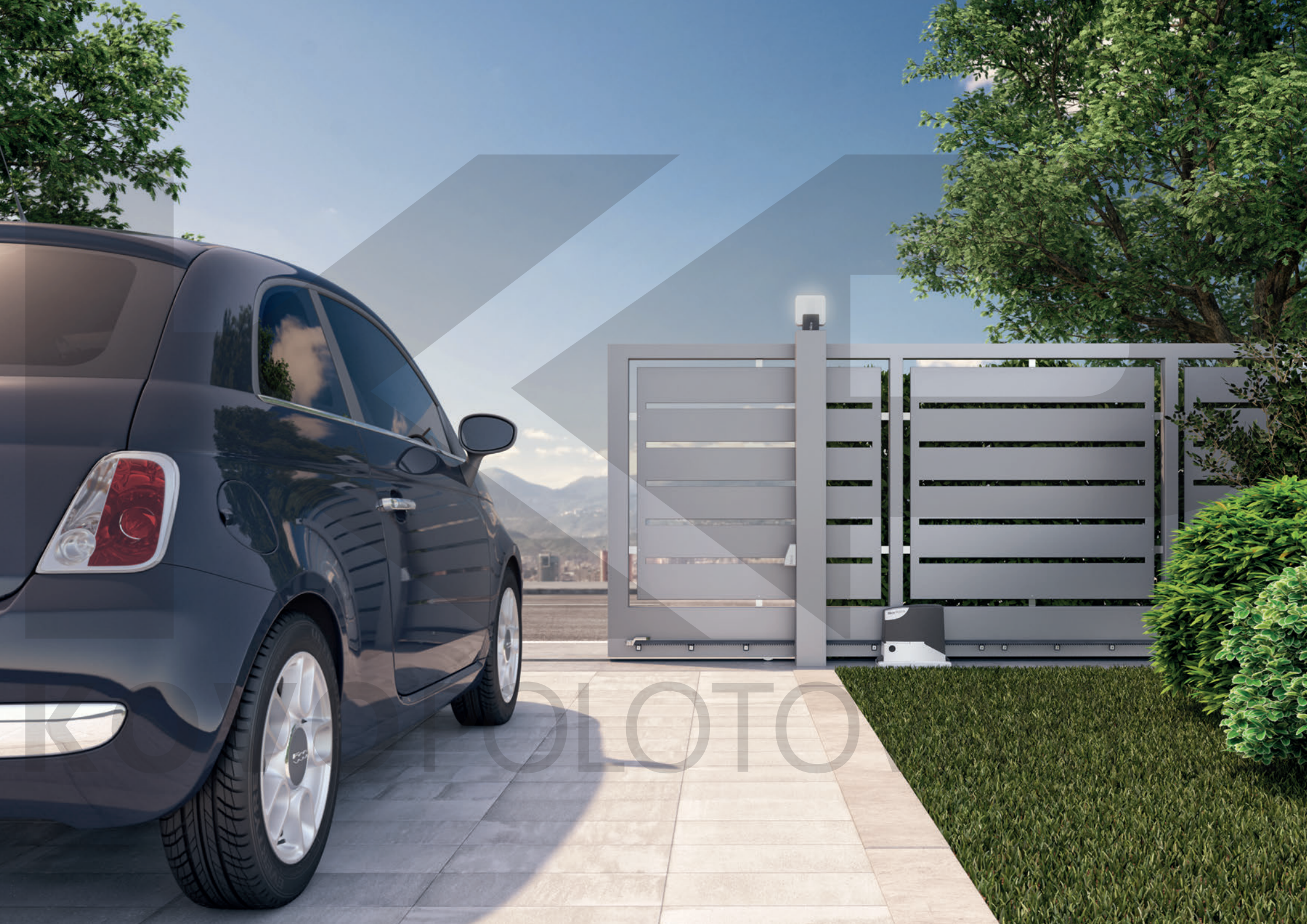

Systems for sliding gates

For residential use, installed also inside a compact post

92. Naked Sliding 400
94. Slight
96. Slight kit BD

For residential and industrial use

98. Robus 400/600/1000
100. Robuskit 400 BD
102. Robuskit 600 BD
104. Roadkit
106. Rox kit
108. Run 1500
110. Run 1800/2500
112. Tub

Racks

113.

KVO POLOTOVARY.CZ

Selection guide

For residential use, installed also inside a compact post, also available in kit with bidirectional technology

Irreversible, 24 Vdc, with built-in control unit and absolute encoder. With BlueBUS technology, compatible for operation with Solemyo and Opera, installed inside a compact post.
Naked Sliding 400
pages 92/93

- for gates up to 400 kg → **NKSL400**

Irreversible, 24 Vdc, with built-in control unit and absolute encoder. With BlueBUS technology, compatible for operation with Solemyo and Opera.
Slight
Slight kit BD
pages 94/97

- for gates up to 400 kg → **SLH400**
  - **KIT** → **SLH400BDKCE**

For residential use, also available in kit with bidirectional technology

Irreversible, 24 Vdc, with built-in control unit.
With BlueBUS technology, compatible for operation with Solemyo and Opera.

Robus HS
pages 32/33

Robus
Robuskit BD
pages 98/103

- for gates up to 250 kg with electromechanical limit switch
  - Hi-Speed → **RB250HS**
- for gates up to 400 kg with electromechanical limit switch → **RB400**
  - **KIT** → **RB400BDKCE**
- for gates up to 500 kg with electromechanical limit switch
  - Hi-Speed → **RB500HS**
- for gates up to 600 kg
  - electromechanical limit switch → **RB600**
    - **KIT** → **RB600BDKCE**
  - inductive limit switch → **RB600P**
- for gates up to 1000 kg
  - electromechanical limit switch → **RB1000**
  - inductive limit switch → **RB1000P**

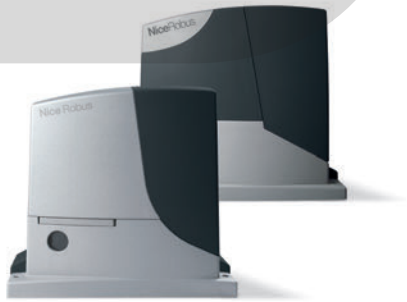

Irreversible, 24 Vdc, with built-in control unit.
For gates up to 400 kg with leaf length up to 6 m.
Roadkit
pages 104/105

- → **RDKCE**

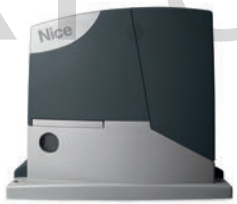

KOVO POLOTOVARY.CZ

Irreversible, 230 Vac, electromechanical limit switch, control unit with built-in radio receiver. For gates up to 600 kg.

Rox kit
pages 106/107

→ KIT → **ROX600KCE**

For residential and industrial use

Irreversible, with built-in control unit, with BlueBUS technology.

Run HS
pages 34/35

Run
pages 108/111

- 24 Vdc compatible for operation with Solemyo and Opera
  - for gates up to 400 kg → electromechanical limit switch → Hi-Speed → **RUN400 HS**
  - for gates up to 1200 kg → electromechanical limit switch → Hi-Speed → **RUN1200 HS**
  - for gates up to 1500 kg → electromechanical limit switch → **RUN1500**
  - for gates up to 1500 kg → inductive limit switch → **RUN1500P**
- 230 Vac compatible for operation with Opera
  - for gates up to 1800 kg → electromechanical limit switch → **RUN1800**
  - for gates up to 1800 kg → inductive limit switch → **RUN1800P**
  - for gates up to 2500 kg → electromechanical limit switch → **RUN2500**
  - for gates up to 2500 kg → electromechanical limit switch → with inverter → **RUN2500I**
  - for gates up to 2500 kg → inductive limit switch → **RUN2500P**

For industrial use

Irreversible, 400 Vac, with built-in control unit.

Tub
pages 112

→ for gates up to 4000 kg → **TUB4000**

KOVOPOLOTOVARY.CZ

BiDi | Yubii | SOLEMYO | OPERA | BLUEBUS | 24V

Naked Sliding 400

Nice concealed motor for sliding gates up to 400 Kg with leaf length up to 6 m

Motor with built-in control unit and absolute encoder which can be installed inside a compact post with suitable holes.

Its **extremely small size** allows the motor to be installed even in very slender posts, with interior size down to 140x140 mm.

User-friendly: thanks to the BlueBUS system, allowing the control unit to be connected to up to 7 pairs of photocells and control, security and signalling devices with just two wires.

Master/slave selection: for automatic synchronisation even of 2 motors, allowing automation of sliding gates with two opposing leaves.

Intelligent: thanks to obstacle detection and automatic working time programming. Self-diagnostics with flashing light signalling.

Safe: acceleration and deceleration can be adjusted at the beginning and at the end of each opening and closing manoeuvre.

Simple and precise limit switch adjustment: integral absolute limit switch, quick learning with just one opening or closing operation with motor released.

Practical: control unit and optional PS124 buffer batteries can be connected by means of practical guided - connector.

Flexible: unlocking can be provided on both sides of the post and/or on the outside (with the KIO and KA1 accessories). Also easy to install on existing posts.

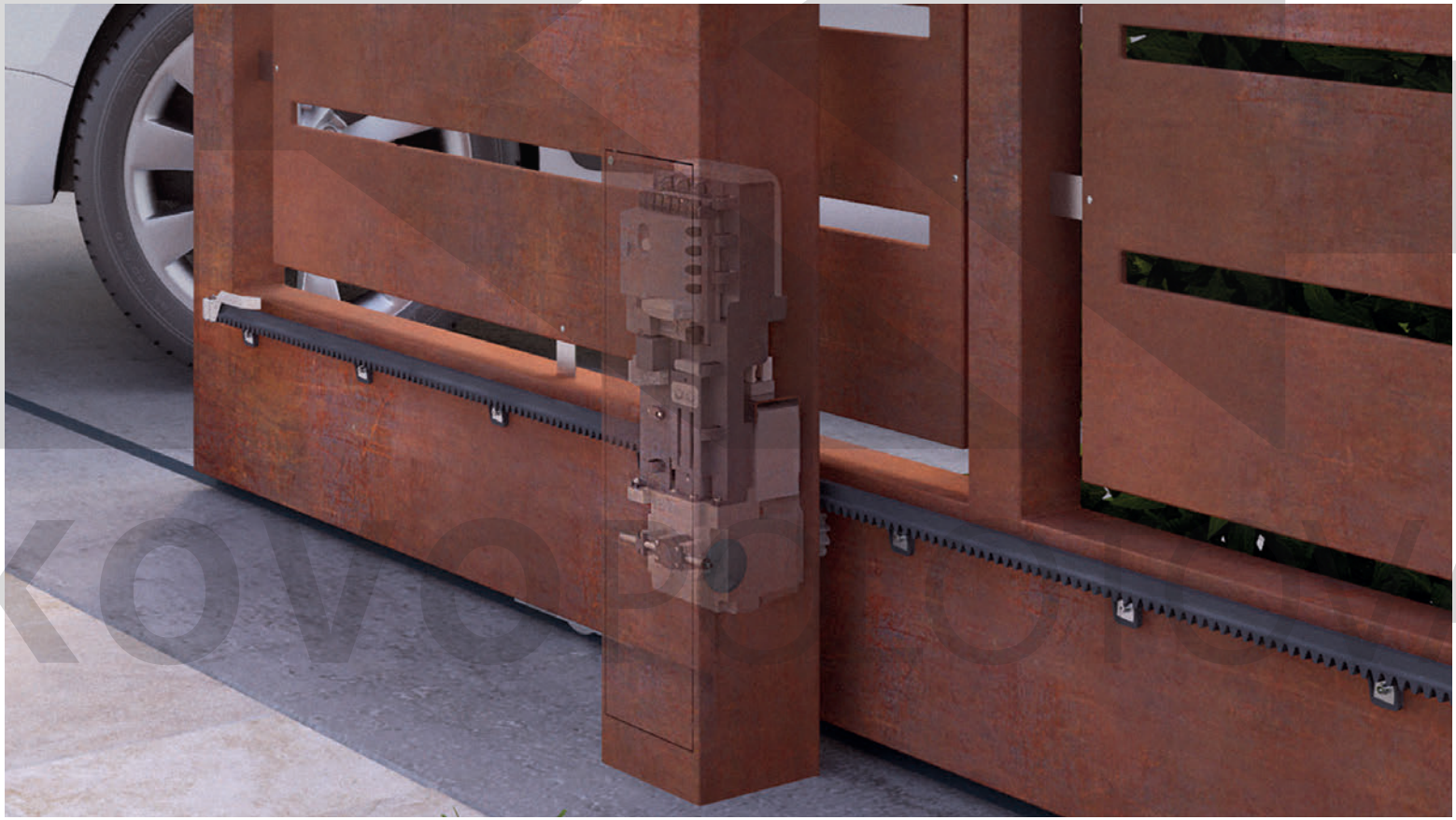

Nice **BiDirectional products** indicate the status of the automations and confirm correct reception of the command.

Discover the complete range of BiDirectional products on page 176.

Yubii is the new Nice ecosystem that connects all the automations in the home.

Discover all the benefits of the Yubii system on page 170.

KOVOBOOKARY.CZ

COMMON ACCESSORIES

CORE
Nice Wi-Fi-Radio Gateway.

Pc./Pack 1

IBT4N
Interface for connecting the O-View programming unit.

Pc./Pack 1

IT4WIFI
Smart Wi-fi interface to manage gates and garage doors by smartphone (*).

Pc./Pack 1

NKA3
Spare control unit.

Pc./Pack 1

PS124
24 V battery with integrated battery charger.

Pc./Pack 1

ROA6
M4 25x20x1000 mm slotted nylon rack with metal insert. For gates weighing up to 500 kg.

Pc./Pack 10

ROA7
M4 rack, zinc coated, 22x22x1000 mm.

Pc./Pack 10

ROA8
M4 rack, 30x8x1000 mm, zinc coated with spacers and screws.

Pc./Pack 10

KIO
Key-operated selector switch for low voltage contacts, with release mechanism for metal cord.

Pc./Pack 1

KA1
6 m cable release kit for KIO.

Pc./Pack 1

TS
Signboard.

Pc./Pack 1

SOLEMYO KIT
The solar power to automate gates, garage doors or barrier gates.

See page 229.

* Not compatible with the Solemyo kit and PS124

TECHNICAL SPECIFICATIONS

Code	Description	Pack/Pallet
NKSL400	Irreversible, 24 Vdc, with built-in control unit and absolute encoder allowing integration in post	16

Code	NKSL400
ELECTRICAL DATA	
Power supply (Vac 50/60 Hz)	230
Absorption (A)	1,1
Power (W)	250
PERFORMANCE DATA	
Speed (m/s)	0,34
Force (N)	400
Work cycle (cycles/hour)	35
DIMENSIONAL AND GENERAL DATA	
Protection level (IP)	44*
Working temp. (°C Min/Max)	-20 ÷ +50
Dimensions (mm)	131x135x405 h
Weight (kg)	6,5

* The protection degree of the automation is determined by the composition motor and column.

DIMENSIONS

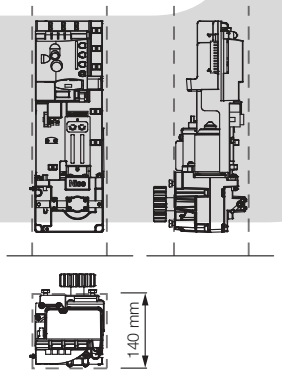

COMPATIBILITY TABLE WITH CONTROL SYSTEMS AND ACCESSORIES

	receiver				transmitter						photocells											flashing light		
Code	Built-in*	OXI	OXIBD	OXILR	ERA INTI	ERA ONE	ERA ONE BD	ERA ONE LR	ERA FLOR	NICEWAY	EPS	EPM	EPL	EPSB	EPMB	EPLB	EPMOW	EPMOR	P210	FT210	P210B	FT210B	ELAC	ELDC	WLT
NKSL400		•	•	•	•	•	•	•	•	•				•	•	•	•	•			•	•		•	•

* Radio receiver incompatible with Opera system

KOVOPOLOTOVARY.CZ

Nice

BiDi | Yubii | SOLEMYO | OPERA | BLUEBUS | 24V

Slight

Nice motor for sliding gates up to 400 kg with leaf length up to 6 m

Motor with built-in control unit and absolute encoder.

Innovative ultra-compact design: the vertical configuration of the motor makes it easy to install even in narrow openings.

User-friendly: thanks to the BlueBUS system, allowing the control unit to be connected to up to 7 pairs of photocells and control, security and signalling devices with just two wires.

Built-in LED light: programmable as either a flashing or courtesy light, it warns of gate movement during opening and closing.

Master/slave selection: for automatic synchronisation even of 2 motors, allowing automation of sliding gates with two opposing leaves.

Intelligent: thanks to obstacle detection and automatic working time programming. Self-diagnostics with flashing light signalling.

Safe: acceleration and deceleration can be adjusted at the beginning and at the end of each opening and closing manoeuvre.

Built-in absolute limit stop:

- simple and precise regulation thanks to the rapid learning in a single movement with the motor released;
- no bracket or accessory to be installed on the ratchet;
- particularly suitable in snow areas.

Practical: control unit and optional PS124 buffer batteries can be connected by means of practical guided - connector.

Nice **BiDirectional products** indicate the status of the automations and confirm correct reception of the command.

Discover the complete range of BiDirectional products on page 176.

Yubii is the new Nice ecosystem that connects all the automations in the home.

Discover all the benefits of the Yubii system on page 170.

KOVOPOLOTOVARY.CZ

COMMON ACCESSORIES

CORE
Nice Wi-Fi-Radio Gateway.

Pc./Pack 1

IBT4N
Interface for connecting the O-View programming unit.

Pc./Pack 1

IT4WIFI
Smart Wi-fi interface to manage gates and garage doors by smartphone (*).

Pc./Pack 1

NKA3
Spare control unit.

Pc./Pack 1

PS124
24 V battery with integrated battery charger.

Pc./Pack 1

ROA6
M4 25x20x1000 mm slotted nylon rack with metal insert. For gates weighing up to 500 kg.

Pc./Pack 10

ROA7
M4 rack, zinc coated, 22x22x1000 mm.

Pc./Pack 10

ROA8
M4 rack, 30x8x1000 mm, zinc coated with spacers and screws.

Pc./Pack 10

TS
Signboard.

Pc./Pack 1

SOLEMYO KIT
The solar power to automate gates, garage doors or barrier gates.

See page 229.

* Not compatible with the Solemyo kit and PS124

TECHNICAL SPECIFICATIONS

Code	Description	Pack/Pallet
SLH400	Irreversible, 24 Vdc, with built-in control unit and absolute encoder with built-in LED light	16

Code	**SLH400**
ELECTRICAL DATA	
Power supply (Vac 50/60 Hz)	230
Absorption (A)	1,1
Power (W)	250
PERFORMANCE DATA	
Speed (m/s)	0,34
Force (N)	400
Work cycle (cycles/hour)	35
DIMENSIONAL AND GENERAL DATA	
Protection level (IP)	44
Working temp. (°C Min/Max)	-20 ÷ +50
Dimensions (mm)	131x135x405 h
Weight (kg)	6,5

DIMENSIONS

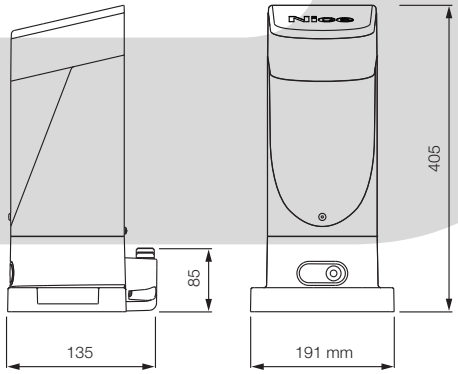

COMPATIBILITY TABLE WITH CONTROL SYSTEMS AND ACCESSORIES

	receiver				transmitter						photocells											flashing light		
Code	Built-in*	OXI	OXIBD	OXILR	ERA INTI	ERA ONE	ERA ONE BD	ERA ONE LR	ERA FLOR	NICEWAY	EPS	EPM	EPL	EPSB	EPMB	EPLB	EPMOW	EPMOR	F210	FT210	F210B	FT210B	ELAC	ELDC	WLT
SLH400		•	•	•	•	•	•	•	•	•				•	•	•	•	•			•	•		•	•

* Radio receiver incompatible with Opera system

KOVOPOLOTOVARY.CZ

Nice

BiDi | Yubii | SOLEMYO | OPERA | BLUEBUS | 24V

Slight kit BD

Nice motor for sliding gates up to 400 kg with leaf length up to 6 m

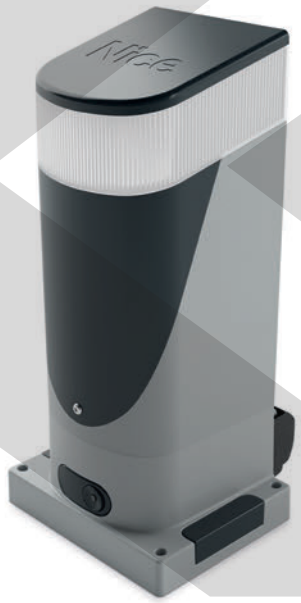

Motor with built-in control unit and absolute encoder.

Innovative ultra-compact design: the vertical configuration of the motor makes it easy to install even in narrow openings.

User-friendly: thanks to the BlueBUS system, allowing the control unit to be connected to up to 7 pairs of photocells and control, security and signalling devices with just two wires.

Built-in LED light: programmable as either a flashing or courtesy light, it warns of gate movement during opening and closing.

Master/slave selection: for automatic synchronisation even of 2 motors, allowing automation of sliding gates with two opposing leaves.

Intelligent: thanks to obstacle detection and automatic working time programming. Self-diagnostics with flashing light signalling.

Safe: acceleration and deceleration can be adjusted at the beginning and at the end of each opening and closing manoeuvre.

Built-in absolute limit stop:

- simple and precise regulation thanks to the rapid learning in a single movement with the motor released;
- no bracket or accessory to be installed on the ratchet;
- particularly suitable in snow areas.

Practical: control unit and optional PS124 buffer batteries can be connected by means of practical guided - connector.

Nice **BiDirectional products** indicate the status of the automations and confirm correct reception of the command.

Discover the complete range of BiDirectional products on page 176.

Yubii is the new Nice ecosystem that connects all the automations in the home.

Discover all the benefits of the Yubii system on page 170.

NEW

The kit contains:

SLH400
1 Irreversible electromechanical gearmotor, with control unit and OXIBD bidirectional radio receiver with connector included, absolute encoder and built-in LED light

ON3EBD
2 Transmitters 433.92 MHz, 3 channels, bidirectional

EPMB
1 Couple of external photocells designed for connection by Nice BlueBUS.

ELDC
1 LED flashing light with integrated aerial.

TS
1 Signboard.

KOVOPOLOTOVARY.CZ

COMMON ACCESSORIES

CORE
Nice Wi-Fi-Radio Gateway.

Pc./Pack 1

IBT4N
Interface for connecting the O-View programming unit.

Pc./Pack 1

IT4WIFI
Smart Wi-fi interface to manage gates and garage doors by smartphone (*).

Pc./Pack 1

NKA3
Spare control unit.

Pc./Pack 1

PS124
24 V battery with integrated battery charger.

Pc./Pack 1

ROA6
M4 25x20x1000 mm slotted nylon rack with metal insert. For gates weighing up to 500 kg.

Pc./Pack 10

ROA7
M4 rack, zinc coated, 22x22x1000 mm.

Pc./Pack 10

ROA8
M4 rack, 30x8x1000 mm, zinc coated with spacers and screws.

Pc./Pack 10

SOLEMYO KIT
The solar power to automate gates, garage doors or barrier gates.

See page 229.

TECHNICAL SPECIFICATIONS

Code	Description	Pack/Pallet
SLH400BDKCE	Kit for automating sliding gates up to 400 kg, irreversible, 24 Vdc, with built-in control unit and absolute encoder, built-in LED light, with bidirectional technology	16

Code	**SLH400**
ELECTRICAL DATA	
Power supply (Vac 50/60 Hz)	230
Absorption (A)	1,1
Power (W)	250
PERFORMANCE DATA	
Speed (m/s)	0,34
Force (N)	400
Work cycle (cycles/hour)	35
DIMENSIONAL AND GENERAL DATA	
Protection level (IP)	44
Working temp. (°C Min/Max)	-20 ÷ +50
Dimensions (mm)	131x135x405 h
Weight (kg)	6,5

DIMENSIONS

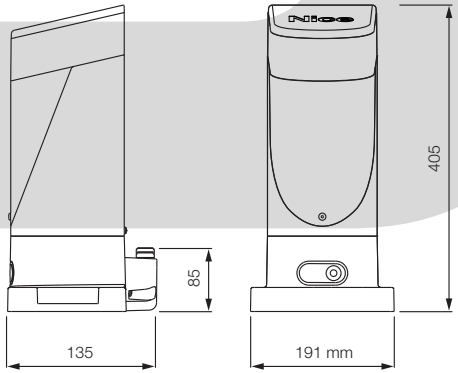

* Not compatible with the Solemyo kit and PS124

KOVOPOLOTOVARY.CZ

Robus 400/600/1000

For sliding gates weighing up to 400 kg (RB400), up to 600 kg (RB600) and up to 1000 kg (RB1000)

Versions with electromechanical limit switch (RB400/RB600/RB1000) and with inductive limit switch (RB600P/RB1000P).

User-friendly: thanks to the BlueBUS system, allowing the control unit to be connected to up to 7 pairs of photocells and control, security and signalling devices with just two wires.

Practical: control unit and optional PS124 buffer batteries can be connected by means of practical guided - connector.

Advanced: RB400, RB600 and RB1000 are equipped with a temperature sensor: adapt the motor power to the climatic conditions and at the same time thermal cut-out. A master/slave selection automatically synchronises two motors. This means it is possible to automate 2-leaf sliding gates set opposite each other.

Intelligent: thanks to the obstacle detection system and automatic programming of the working times. Self-diagnosis by means of a flashing light. 8 programming levels.

Safe: acceleration and deceleration can be adjusted at the beginning and at the end of each opening and closing manoeuvre.

Sturdy: base and release in pressure die cast with easy to open handle.

Silent: gear motor on bearings.

Nice **BiDirectional products** indicate the status of the automations and confirm correct reception of the command.

Discover the complete range of BiDirectional products on page 176.

Yubii is the new Nice ecosystem that connects all the automations in the home.

Discover all the benefits of the Yubii system on page 170.

RB400

RB600/RB1000

KOVOPLOTOVARY.CZ

COMMON ACCESSORIES

CORE
Nice Wi-Fi-Radio Gateway.

Pc./Pack 1

IBT4N
Interface for connecting the O-View programming unit.

Pc./Pack 1

IT4WIFI
Smart Wi-fi interface to manage gates and garage doors by smartphone (*).

Pc./Pack 1

RBA3
Spare control unit for RB400, RB600/600P, RB1000/1000P and RUN1500/1500P.

Pc./Pack 1

PS124
24 V battery with integrated battery charger.

Pc./Pack 1

RBA1
Inductive limit switch.

Pc./Pack 1

ROA6
M4 25x20x1000 mm slotted nylon rack with metal insert. For gates weighing up to 500 kg.

Pc./Pack 10

ROA7
M4 rack, zinc coated, 22x22x1000 mm.

Pc./Pack 10

ROA8
M4 rack, 30x8x1000 mm, zinc coated with spacers and screws.

Pc./Pack 10

TS
Signboard.

Pc./Pack 1

SOLEMYO KIT
The solar power to automate gates, garage doors or barrier gates.

See page 229.

* Not compatible with the Solemyo kit and PS124

TECHNICAL SPECIFICATIONS

Code	Description	Pack/Pallet
RB400	Irreversible, 24 Vdc, with incorporated control unit, with electromechanical limit switch, for gates up to 400 kg	15
RB600	Irreversible, 24 Vdc, with incorporated control unit, with electromechanical limit switch, for gates up to 600 kg	15
RB600P	Irreversible, 24 Vdc, with incorporated control unit, with inductive limit switch, for gates up to 600 kg	15
RB1000	Irreversible, 24 Vdc, with incorporated control unit, with electromechanical limit switch, for gates up to 1000 kg	15
RB1000P	Irreversible, 24 Vdc, with incorporated control unit, with inductive limit switch, for gates up to 1000 kg	15

Code	RB400	RB600/600P	RB1000/1000P
ELECTRICAL DATA			
Power supply (Vac 50/60 Hz)		230	
Absorption (A)	1,1	2,5	2,3
Power (W)	250	515	450
PERFORMANCE DATA			
Speed (m/s)	0,34	0,31	0,28
Force (N)	400	600	900
Work cycle (cycles/hour)	35	40	50
DIMENSIONAL AND GENERAL DATA			
Protection level (IP)		44	
Working temp. (°C Min/Max)		-20 ÷ +50	
Dimensions (mm)	330x195x277 h	330x210x303 h	
Weight (kg)	8	11	13

DIMENSIONS

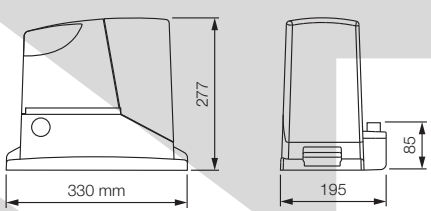

RB400

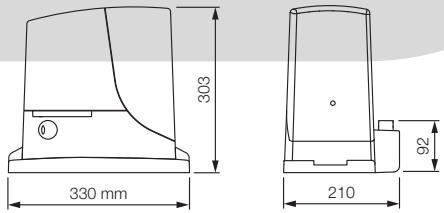

RB600/RB1000

COMPATIBILITY TABLE WITH CONTROL SYSTEMS AND ACCESSORIES

	receiver				transmitter						photocells												flashing light		
Code	Built-in*	OXI	OXIBD	OXILR	ERA INTI	ERA ONE	ERA ONE BD	ERA ONE LR	ERA FLOR	NICEWAY	EPS	EPM	EPL	EPSB	EPMB	EPLB	EPMOW	EPMOR	F210	FT210	F210B	FT210B	ELAC	ELDC	WLT
RB400		•	•	•	•	•	•	•	•	•				•	•	•	•	•			•	•		•	•
RB600/600P		•	•	•	•	•	•	•	•	•				•	•	•	•	•			•	•		•	•
RB1000/1000P		•	•	•	•	•	•	•	•	•				•	•	•	•	•			•	•		•	•

* Radio receiver incompatible with Opera system

KOVOPOLOTOVARY.CZ

Nice

BiDi | Yubii | SOLEMYO | OPERA | BLUEBUS | 24V

Robuskit 400 BD

For sliding gates weighing up to 400 kg

User-friendly: thanks to the BlueBUS system, allowing the control unit to be connected to up to 7 pairs of photocells and control, security and signalling devices with just two wires.

Practical: control unit and PS124 buffer battery (optional) can be connected by means of a simple connector and can be housed directly inside Robus.

Advanced: RB400 is equipped with a temperature sensor: adapt the motor power to the climatic conditions and at the same time thermal cut-out. A master/slave selection automatically synchronises two motors. This means it is possible to automate 2-leaf sliding gates set opposite each other.

Intelligent: thanks to the obstacle detection system and automatic programming of the working times. Self-diagnosis by means of a flashing light. 8 programming levels.

Safe: acceleration and deceleration can be adjusted at the beginning and at the end of each opening and closing manoeuvre.

Sturdy: base and release in pressure die cast with easy to open handle.

Silent: gear motor on bearings.

Nice **BiDirectional products** indicate the status of the automations and confirm correct reception of the command.

Discover the complete range of BiDirectional products on page 176.

Yubii is the new Nice ecosystem that connects all the automations in the home.

Discover all the benefits of the Yubii system on page 170.

NEW

The kit contains:

RB400
1 Irreversible electromechanical gearmotor, with built-in control unit and OXIBD bidirectional radio receiver with connector for connection via Nice BlueBUS.

ON3EBD
2 Transmitters 433.92 MHz, 3 channels, bidirectional

EPMB
1 Couple of external photocells designed for connection by Nice BlueBUS.

ELDC
1 LED flashing light with integrated aerial.

TS
1 Signboard.

KOVOPOLOTOVARY.CZ

COMMON ACCESSORIES

CORE
Nice Wi-Fi-Radio Gateway.

Pc./Pack 1

IBT4N
Interface for connecting the O-View programming unit.

Pc./Pack 1

IT4WIFI
Smart Wi-fi interface to manage gates and garage doors by smartphone (*).

Pc./Pack 1

RBA3
Spare control unit for RB400, RB600/600P, RB1000/1000P and RUN1500/1500P.

Pc./Pack 1

PS124
24 V battery with integrated battery charger.

Pc./Pack 1

RBA1
Inductive limit switch.

Pc./Pack 1

ROA6
M4 25x20x1000 mm slotted nylon rack with metal insert. For gates weighing up to 500 kg.

Pc./Pack 10

ROA7
M4 rack, zinc coated, 22x22x1000 mm.

Pc./Pack 10

ROA8
M4 rack, 30x8x1000 mm, zinc coated with spacers and screws.

Pc./Pack 10

SOLEMYO KIT
The solar power to automate gates, garage doors or barrier gates.

See page 229.

* Not compatible with the Solemyo kit and PS124

TECHNICAL SPECIFICATIONS

Code	Description	Pack/Pallet
RB400BDKCE	Kit for automating sliding gates up to 400 kg. 24 Vdc, built-in control unit, with bidirectional technology	14

N.B. The content of the package may vary: consult the retailer.

Code	RB400
ELECTRICAL DATA	
Power supply (Vac 50/60 Hz)	230
Absorption (A)	1,1
Power (W)	250
PERFORMANCE DATA	
Speed (m/s)	0,34
Force (N)	400
Work cycle (cycles/hour)	35
DIMENSIONAL AND GENERAL DATA	
Protection level (IP)	44
Working temp. (°C Min/Max)	-20 ÷ +50
Dimensions (mm)	330x195x277 h
Weight (kg)	8

DIMENSIONS

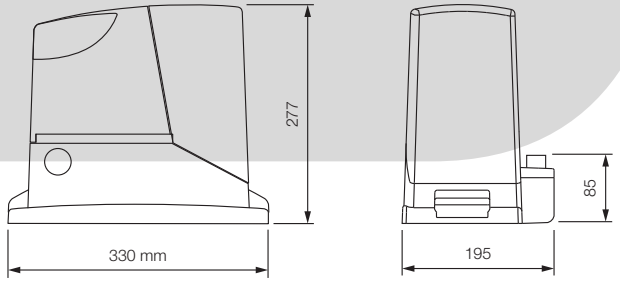

KOVO POLOTOVARY.CZ

Nice

BiDi | Yubii | SOLEMYO | OPERA | BLUEBUS | 24V

Robuskit 600 BD

For sliding gates weighing up to 600 kg

User-friendly: thanks to the BlueBUS system, allowing the control unit to be connected to up to 7 pairs of photocells and control, security and signalling devices with just two wires.

Practical: control unit and PS124 buffer battery (optional) can be connected by means of a simple connector and can be housed directly inside the motor.

Advanced: RB600 is equipped with a temperature sensor tath adapt the motor power to the climatic conditions and at the same time thermal cut-out. A master/slave selection automatically synchronises two motors. This means it is possible to automate 2-leaf sliding gates set opposite each other.

Intelligent: thanks to the obstacle detection system and automatic programming of the working times. Self-diagnosis by means of a flashing light. 8 programming levels.

Safe: acceleration and deceleration can be adjusted at the beginning and at the end of each opening and closing manoeuvre.

Sturdy: base and release in pressure die cast with easy to open handle.

Silent: gear motor on bearings.

Nice **BiDirectional products** indicate the status of the automations and confirm correct reception of the command.

Discover the complete range of BiDirectional products on page 176.

Yubii is the new Nice ecosystem that connects all the automations in the home.

Discover all the benefits of the Yubii system on page 170.

NEW

The kit contains:

RB600
1 Irreversible electromechanical gearmotor, with built-in control unit and OXIBD bidirectional radio receiver with connector for connection via Nice BlueBUS.

ON3EBD
2 Transmitters 433.92 MHz, 3 channels, bidirectional

EPMB
1 Couple of external photocells designed for connection by Nice BlueBUS.

ELDC
1 LED flashing light with integrated aerial.

TS
1 Signboard.

KOVOPOLOTOVARY.CZ

COMMON ACCESSORIES

CORE
Nice Wi-Fi-Radio Gateway.

Pc./Pack 1

IBT4N
Interface for connecting the O-View programming unit.

Pc./Pack 1

IT4WIFI
Smart Wi-fi interface to manage gates and garage doors by smartphone (*).

Pc./Pack 1

RBA3
Spare control unit for RB400, RB600/600P, RB1000/1000P and RUN1500/1500P.

Pc./Pack 1

PS124
24 V battery with integrated battery charger.

Pc./Pack 1

RBA1
Inductive limit switch.

Pc./Pack 1

ROA7
M4 rack, zinc coated, 22x22x1000 mm.

Pc./Pack 10

ROA8
M4 rack, 30x8x1000 mm, zinc coated with spacers and screws.

Pc./Pack 10

SOLEMYO KIT
The solar power to automate gates, garage doors or barrier gates.

See page 229.

* Not compatible with the Solemyo kit and PS124

TECHNICAL SPECIFICATIONS

Code	Description	Pack/Pallet
RB600BDKCE	Kit for automating sliding gates up to 600 kg. 24 Vdc, built-in control unit, with bidirectional technology	14

N.B. The content of the package may vary: consult the retailer.

Code	**RB600**
ELECTRICAL DATA	
Power supply (Vac 50/60 Hz)	230
Absorption (A)	2,5
Power (W)	515
PERFORMANCE DATA	
Speed (m/s)	0,31
Force (N)	600
Work cycle (cycles/hour)	40
DIMENSIONAL AND GENERAL DATA	
Protection level (IP)	44
Working temp. (°C Min/Max)	-20 ÷ +50
Dimensions (mm)	330x210x303 h
Weight (kg)	11

DIMENSIONS

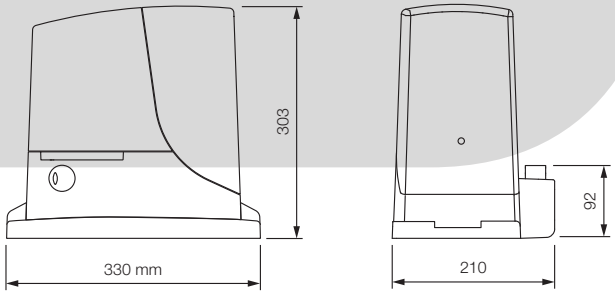

KOVOPOLOTOVARY.CZ

Nice

OPERA | 24V

Roadkit

For sliding gates weighing up to 400 kg

Practical: built-in control unit, can be connected by means of a simple connector and can be housed directly inside the motor; incorporated radio card, compatible with the Nice Flo and Smilo systems: 100 transmitters can be entered!

Advanced: decelerations can be managed directly from the control unit and gate movement speed and force can be adjusted.

Intelligent: thanks to the obstacle detection system and automatic programming of the working times. Self-diagnosis by means of a flashing light.

Practical: the control unit and PS124 buffer battery (optional) can be connected by means of a simple connector and can be housed directly inside the motor.

The kit contains:

RD400
1 Non-reversible electromechanical gearmotor, 24 Vdc, with control unit and built-in receiver, designed to take the PS124 buffer battery (optional).

FLO2RE
1 Transmitter 433.92 MHz, 2 channels.

EPM
1 Pair of photocells for outdoor installation

EKS
1 Key selector switch for outdoor installation.

ELDC
1 LED flashing light with integrated aerial.

TS
1 Signboard.

KOVOPOLOTOVARY.CZ

COMMON ACCESSORIES

IBT4N
Interface for connecting the O-View programming unit.

Pc./Pack 1

IT4WIFI
Smart Wi-fi interface to manage gates and garage doors by smartphone (*).

Pc./Pack 1

RBA4
Spare control unit for RDKCE.

PS124
24 V battery with integrated battery charger.

Pc./Pack 1

CM-B
Pawl with two metal release keys.

ROA6
M4 25x20x1000 mm slotted nylon rack with metal insert. For gates weighing up to 500 kg.

Pc./Pack 10

ROA7
M4 rack, zinc coated, 22x22x1000 mm.

Pc./Pack 10

ROA8
M4 rack, 30x8x1000 mm, zinc coated with spacers and screws.

Pc./Pack 10

TECHNICAL SPECIFICATIONS

Code	Description
RDKCE	Kit for the automation of sliding gates up to 400 kg and up to 6 m lenght, 24 Vdc, with incorporated control unit and receiver

N.B. The content of the package may vary: consult the retailer.

Code	**RD400**
ELECTRICAL DATA	
Power supply (Vac 50/60 Hz)	230
Absorption (A)	1,1
Power (W)	210
PERFORMANCE DATA	
Speed (m/s)	0,25
Force (N)	400
Work cycle (cycles/hour)	20
DIMENSIONAL AND GENERAL DATA	
Protection level (IP)	44
Working temp. (°C Min/Max)	-20 ÷ +55
Dimensions (mm)	330x195x277 h
Weight (kg)	8

DIMENSIONS

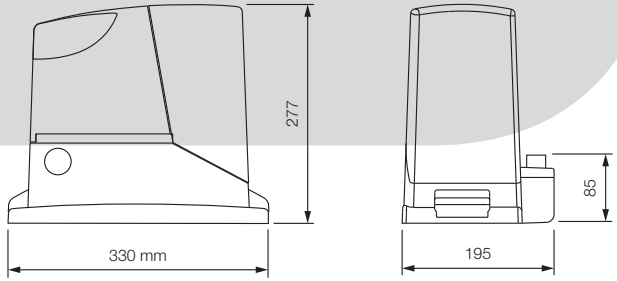

* Not compatible with the Solemyo kit and PS124

KOVOPOLOTOVARY.CZ

Nice

OPERA 230V

ROX600KCE

For sliding gates weighing up to 600 kg

Practical and safe: built-in control unit, incorporated radio card. Compatible with the Flo and Smilo series.

Sturdy: base and release in pressure die cast with easy to open handle.

Silent: gear motor on bearings.

The kit contains:

ROX600
1 Gearmotor with electromechanical limit switch, for gates weighing up to 600 kg, with control unit and built-in receiver.

FLO2RE
1 Transmitter 433.92 MHz, 2 channels.

EPM
1 Pair of photocells for outdoor installation

EKS
1 Key selector switch for outdoor installation.

ELAC
1 LED flashing light with integrated aerial.

TS
1 Signboard.

KOVOPOLOTOVARY.CZ

COMMON ACCESSORIES

IBT4N
Interface for connecting the O-View programming unit.

Pc./Pack 1

IT4WIFI
Smart Wi-fi interface to manage gates and garage doors by smartphone (*).

Pc./Pack 1

ROA40
Spare control unit, for ROX600.

Pc/Pack 1

ROA6
M4 25x20x1000 mm slotted nylon rack with metal insert. For gates weighing up to 500 kg.

Pc./Pack 10

ROA7
M4 rack, zinc coated, 22x22x1000 mm.

Pc./Pack 10

ROA8
M4 rack, 30x8x1000 mm, zinc coated with spacers and screws.

Pc./Pack 10

TECHNICAL SPECIFICATIONS

Code	Description	Pack/Pallet
ROX600KCE	Kit for the automation of sliding gates up to 600 kg, 230 Vac, incorporated control unit, built-in radio receiver	14

N.B. The content of the package may vary: consult the retailer.

Code	**ROX600**
ELECTRICAL DATA	
Power supply (Vac 50/60 Hz)	230
Absorption (A)	1,4
Power (W)	300
PERFORMANCE DATA	
Speed (m/s)	0,18
Force (N)	600
Work cycle (cycles/hour)	20
DIMENSIONAL AND GENERAL DATA	
Protection level (IP)	44
Working temp. (°C Min/Max)	-20 ÷ +50
Dimensions (mm)	330x210x303 h
Weight (kg)	11

DIMENSIONS

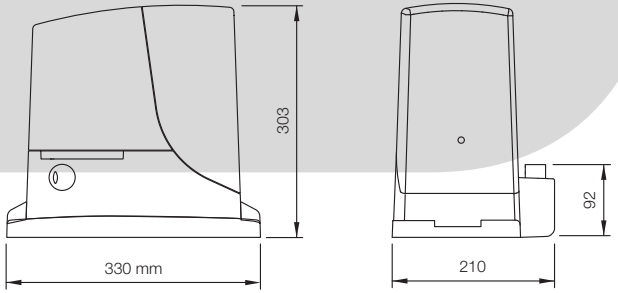

KOVOPOLOTOVARY.CZ

* Not compatible with the Solemyo kit and PS124

Nice

BiDi | Yubii | SOLEMYO | OPERA | BLUEBUS | 24V

Run 1500

For sliding gates weighing up to 1500 kg

Versions with electromechanical limit switch (RUN1500) and with inductive limit switch (RUN1500P).

User-friendly: thanks to the BlueBUS system, allowing the control unit to be connected to up to 7 pairs of photocells and control, security and signalling devices with just two wires.

Practical: the control unit and PS124 buffer battery (optional) can be connected by means of a simple connector and can be housed directly inside the motor.

Advanced: the temperature sensor adapts the motor force to weather conditions, setting the thermal cut-out protection accordingly; a master/slave selection automatically synchronises 2 motors, enabling the automation of sliding gates with two opposing leaves.

Intelligent: thanks to the obstacle detection system and automatic programming of the working times. Self-diagnosis by means of a flashing light. 8 programming levels.

Safe: acceleration and deceleration can be adjusted at the beginning and at the end of each opening and closing manoeuvre.

Sturdy: base and release in pressure die cast with easy to open handle.

Silent: gear motor on bearings.

Nice **BiDirectional products** indicate the status of the automations and confirm correct reception of the command.

Discover the complete range of BiDirectional products on page 176.

Yubii is the new Nice ecosystem that connects all the automations in the home.

Discover all the benefits of the Yubii system on page 170.

KOVOPOLOTOVARY.CZ

COMMON ACCESSORIES

CORE
Nice Wi-Fi-Radio Gateway.

Pc./Pack 1

IBT4N
Interface for connecting the O-View programming unit.

Pc./Pack 1

IT4WIFI
Smart Wi-fi interface to manage gates and garage doors by smartphone (*).

Pc./Pack 1

RBA3
Spare control unit for RB400, RB600/600P, RB1000/1000P and RUN1500/1500P.

Pc./Pack 1

PS124
24 V battery with integrated battery charger.

Pc./Pack 1

RBA1
Inductive limit switch.

Pc./Pack 1

ROA7
M4 rack, zinc coated, 22x22x1000 mm.

Pc./Pack 10

ROA8
M4 rack, 30x8x1000 mm, zinc coated with spacers and screws.

Pc./Pack 10

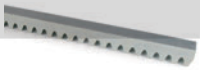

ROA81
M6 rack, 30x30x1000 mm, zinc coated, to be coupled with RUA12.

Pc./Pack 10

RUA12
12-teeth pinion, module 6, to be coupled with rack ROA81. The Run automation is supplied with a module 4 pinion to be used with the standard racks ROA7 and ROA8.

Pc./Pack 1

TS
Signboard.

Pc./Pack 1

SOLEMYO KIT
The solar power to automate gates, garage doors or barrier gates.

See page 229.

* Not compatible with the Solemyo kit and PS124

TECHNICAL SPECIFICATIONS

Code	Description	Pack/Pallet
RUN1500	Irreversible, 24 Vdc, with built-in control unit, with electromechanical limit switch, for sliding gates weighing up to 1500 kg	12
RUN1500P	Irreversible, 24 Vdc, with built-in control unit, with inductive limit switch, for sliding gates weighing up to 1500 kg	12

Code	**RUN1500/1500P**
ELECTRICAL DATA	
Power supply (Vac 50/60 Hz)	230
Absorption (A)	2
Power (W)	400
PERFORMANCE DATA	
Speed (m/s)	0,25
Force (N)	1000
Work cycle (cycles/hour)	60
DIMENSIONAL AND GENERAL DATA	
Protection level (IP)	44
Working temp. (°C Min/Max)	-20 ÷ +50
Dimensions (mm)	400x255x390 h
Weight (kg)	19

DIMENSIONS

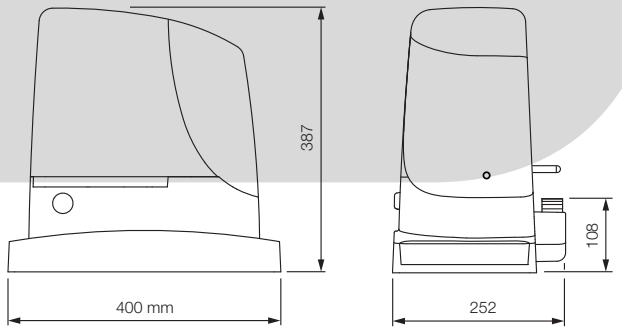

COMPATIBILITY TABLE WITH CONTROL SYSTEMS AND ACCESSORIES

	receiver			transmitter						photocells											flashing light		
Code	Built-in*	OXI	OXIBD	OXILR	ERA INTI	ERA ONE	ERA ONE BD	ERA ONE LR	ERA FLOR	NICEWAY	EPS	EPM	EPL	EPSB	EPMB	EPLB	EPMOW	EPMOR	P210	FT210	F210B	FT210B	ELAC	ELDC	WLT
RUN1500/1500P	•	•	•	•	•	•	•	•	•	•				•	•	•	•	•			•	•		•	•

* Radio receiver incompatible with Opera system

KOVO POLOTOVARY.CZ

Nice

BiDi | Yubii | OPERA | BLUEBUS | 230V

Run 1800/2500

For sliding gates weighing up to 1800 kg (RUN1800) and up to 2500 kg (RUN2500)

Suitable to operate in extreme conditions, in systems for intensive use.

Ventilated motor with inductive limit switch (RUN1800P/RUN2500P) or electromechanical limit switch (RUN1800/RUN2500/RUN2500I).

Easy to install: the BlueBUS system enables connections by means of just two wires between the control unit and up to 15 control safety and signalling devices.

Safe: the acceleration settings (at the start of the manoeuvre) and the deceleration settings (at the end of the manoeuvre) are precise and reliable.

Advanced temperature sensor: Run is able to manage force, adapting it to the different climatic and environmental conditions, while adapting the thermal cut-out protection and intensity of self-ventilation, depending on the temperature reading.

Master/slave selection: for automatic synchronisation even of 2 motors, allowing automation of sliding gates with two opposing leaves.

Practical and functional: the control unit (and inverter on version RUN2500I), housed inside Run, can be simply connected by means of the practical connector guide.

Silent: gear motor on bearings.

RUN2500I version with built-in inverter

Perfect movement: the inverter enables the power supply and drive of the 3-phase motor with single-phase current at 230 Vac, acting on the frequency to adjust speed of the automation from a minimum of 8.2 m/min to maximum 15.4 m/min. In the automation deceleration phase, the inverter, which dialogues with the control unit, increases the torque, thus improving performance and reducing the risk of the automation blocking on impact with obstacles.

Nice **BiDirectional products** indicate the status of the automations and confirm correct reception of the command.

Discover the complete range of BiDirectional products on page 176.

Yubii is the new Nice ecosystem that connects all the automations in the home.

Discover all the benefits of the Yubii system on page 170.

KOVOPOLOTOVARY.CZ

COMMON ACCESSORIES

CORE
Nice Wi-Fi-Radio Gateway.

Pc./Pack 1

IT4WIFI
Smart Wi-fi interface to manage gates and garage doors by smart-phone.

Pc./Pack 1

RUA1
Spare control unit for RUN1800/1800P and RUN2500/2500P.

Pc./Pack 1

RUA2
Spare control unit, for RUN2500I.

Pc/Pack 1

RUA3
Spare inverter for RUN2500I.

Pc./Pack 1

ROA7
M4 rack, zinc coated, 22x22x1000 mm.

Pc./Pack 10

ROA8
M4 rack, 30x8x1000 mm, zinc coated with spacers and screws.

Pc./Pack 10

ROA81
M6 rack, 30x30x1000 mm, zinc coated, to be coupled with RUA12.

Pc./Pack 10

RUA12
12-teeth pinion, module 6, to be coupled with rack ROA81. The Run automation is supplied with a module 4 pinion to be used with the standard racks ROA7 and ROA8.

Pc./Pack 1

TS
Signboard.

Pc./Pack 1

TECHNICAL SPECIFICATIONS

Code	Description	Pack/Pallet
RUN1800	Irreversible, 230 Vac, with built-in control unit, with electromechanical limit switch, for sliding gates weighing up to 1800 kg	12
RUN1800P	Irreversible, 230 Vac, with built-in control unit, with inductive limit switch, for sliding gates weighing up to 1800 kg	12
RUN2500	Irreversible, 230 Vac, with built-in control unit, with electromechanical limit switch, for sliding gates weighing up to 2500 kg	12
RUN2500P	Irreversible, 230 Vac, with built-in control unit, with inductive limit switch, for sliding gates weighing up to 2500 kg	12
RUN2500I	Irreversible, 230 Vac, with built-in control unit and inverter, with electromechanical limit switches, for sliding gates weighing up to 2500 kg	12

Code	RUN1800/1800P	RUN2500/2500P	RUN2500I
ELECTRICAL DATA			
Power supply (Vac/Hz)	230/50*		230/50-60
Absorption (A)	3	3,8	3,7
Power (W)	700	870	650
PERFORMANCE DATA			
Speed (m/s)	0,17		0,26
Force (N)	1110	1390	1660
Work cycle (cycles/hour)	42		56
DIMENSIONAL AND GENERAL DATA			
Protection level (IP)	44		
Working temp. (°C Min/Max)	-20 ÷ +50		
Dimensions (mm)	400x255x390 h		
Weight (kg)	24,5		25

* 60 Hz version available on request.

DIMENSIONS

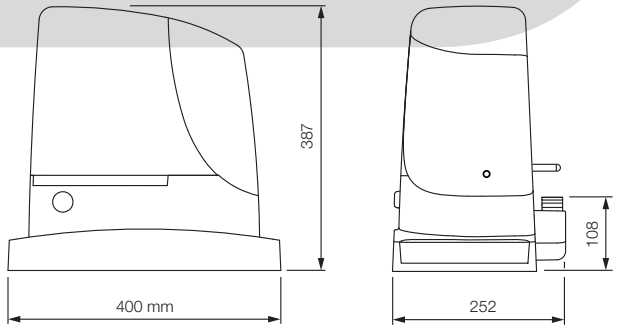

COMPATIBILITY TABLE WITH CONTROL SYSTEMS AND ACCESSORIES

	receiver				transmitter						photocells											flashing light		
Code	Built-in*	OXI	OXIBD	OXILR	ERA INTI	ERA ONE	ERA ONE BD	ERA ONE LR	ERA FLOR	NICEWAY	EPS	EPM	EPL	EPSB	EPMB	EPLB	EPMOW	EPMOR	F210	FT210	F210B	FT210B	ELAC	ELDC	WLT
RUN1800/1800P		•	•	•	•	•	•	•	•	•				•	•	•	•	•			•	•		•	•
RUN2500/2500P		•	•	•	•	•	•	•	•	•				•	•	•	•	•			•	•		•	•
RUN2500I		•	•	•	•	•	•	•	•	•				•	•	•	•	•			•	•		•	•

* Radio receiver incompatible with Opera system

KOVO POLOTOVARY.CZ

Nice

BiDi | Yubii | OPERA | 400V

Tub

For sliding gates weighing up to 4000 kg

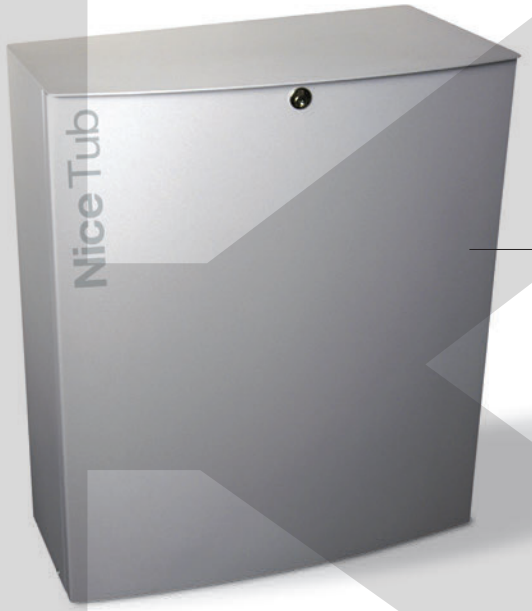

Ventilated motor to increase work cycle efficiency

Ideal for industrial use.

Irreversible electromechanical 400 Vac gear motor with built-in D-PRO 500 control unit.

Powerful: ideal for automating large industrial gates.

Functionality and safety: programmable, with electromechanical brake to eliminate gate inertia. Self-ventilated motor to increase the working cycles.

Maximum durability and silence: bronze and metal gears.

Advanced: Tub satisfies all control needs thanks to the possibility of easily and precisely managing the various functions with the O-View programmer.

Practical: the lever release enables safe and simple operation.

Nice **BiDirectional products** indicate the status of the automations and confirm correct reception of the command.

Discover the complete range of BiDirectional products on page 176.

Yubii is the new Nice ecosystem that connects all the automations in the home.

Discover all the benefits of the Yubii system on page 170.

TECHNICAL SPECIFICATIONS

Code	Description
TUB4000	Irreversible, electromechanical limit switch, 400 Vac, with built-in D-PRO 500 control unit

Code	TUB4000
ELECTRICAL DATA	
Power supply (Vac 50 Hz)*	400
Absorption (A)	1,6
Power (W)	580
PERFORMANCE DATA	
Speed (m/s)	0,16
Force (N)	7740
Work cycle (cycles/hour)**	42
DIMENSIONAL AND GENERAL DATA	
Protection level (IP)	54
Working temp. (°C Min/Max)	-20 ÷ +55
Dimensions (mm)	480x240x580 h
Weight (kg)	60

* Usable also at 60 Hz with consequent change in performance ratings.
** With leafs up to 5 m long.

DIMENSIONS

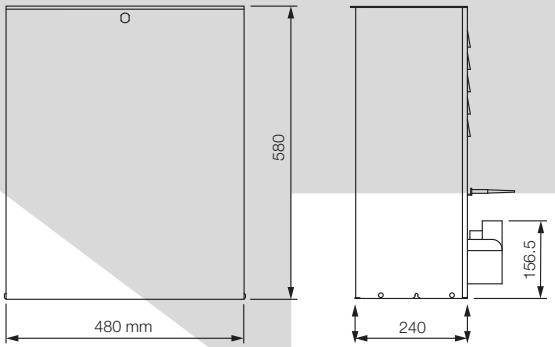

COMMON ACCESSORIES

CORE
Nice Wi-Fi-Radio Gateway.

Pc./Pack 1

IBT4N
Interface for connecting the O-View programming unit.

Pc./Pack 1

COMMON ACCESSORIES

IT4WIFI
Smart Wi-fi interface to manage gates and garage doors by smartphone.

Pc./Pack 1

DPRO500
Spare control unit.

Pc./Pack 1

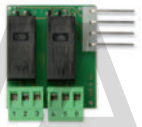

NDA040
For optional potential free outputs.

Pc./Pack 1

ROA81
M6 rack, 30x30x1000 mm, zinc coated, to be coupled with RUA12.

Pc./Pack 10

TS
Signboard.

Pc./Pack 1

KOVOPOLOTOVARY.CZ

Racks

For sliding gates or on motors with pinion

Plastic ratchet for gates weighing up to 500 kg (ROA6).

Galvanised ratchet, ideal for all types of sliding gate: ROA7 for welding directly on the gate, ROA8 **practical and quick to install** thanks to the use of spacers.

ROA6
M4 25x20x1000 mm slotted nylon rack with metal insert. For gates weighing up to 500 kg.

Pc./Pack 10

ROA7
M4 rack, zinc coated, 22x22x1000 mm.

Pc./Pack 10

ROA8
M4 rack, 30x8x1000 mm, zinc coated with spacers and screws.

Pc./Pack 10

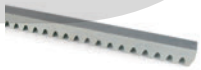

ROA81
M6 rack, 30x30x1000 mm, zinc coated, to be coupled with RUA12.

Pc./Pack 10

KOVOPOLOTOVARY.CZ

Barrier gate operator systems

NiceBar System

118. S-Bar
120. M-Bar
124. L-Bar

Wide System

130.

KOVOPOLOTOVARY.CZ

S/M/L Bar
Barrier gate operators for all sizes

High performing, reliable and durable.
Elegant, streamlined design.
Carefully selected materials.
Greater convenience, safety at all times.

Integrated solutions for all requirements.
Barrier gate operators to control road access to car parks, industrial, private and block of flats transit areas, including high traffic ones.

5 models in 3 standard versions, up to 7 modular bars from 3 to 9 m.
Easy transport and optimised management in the warehouse.

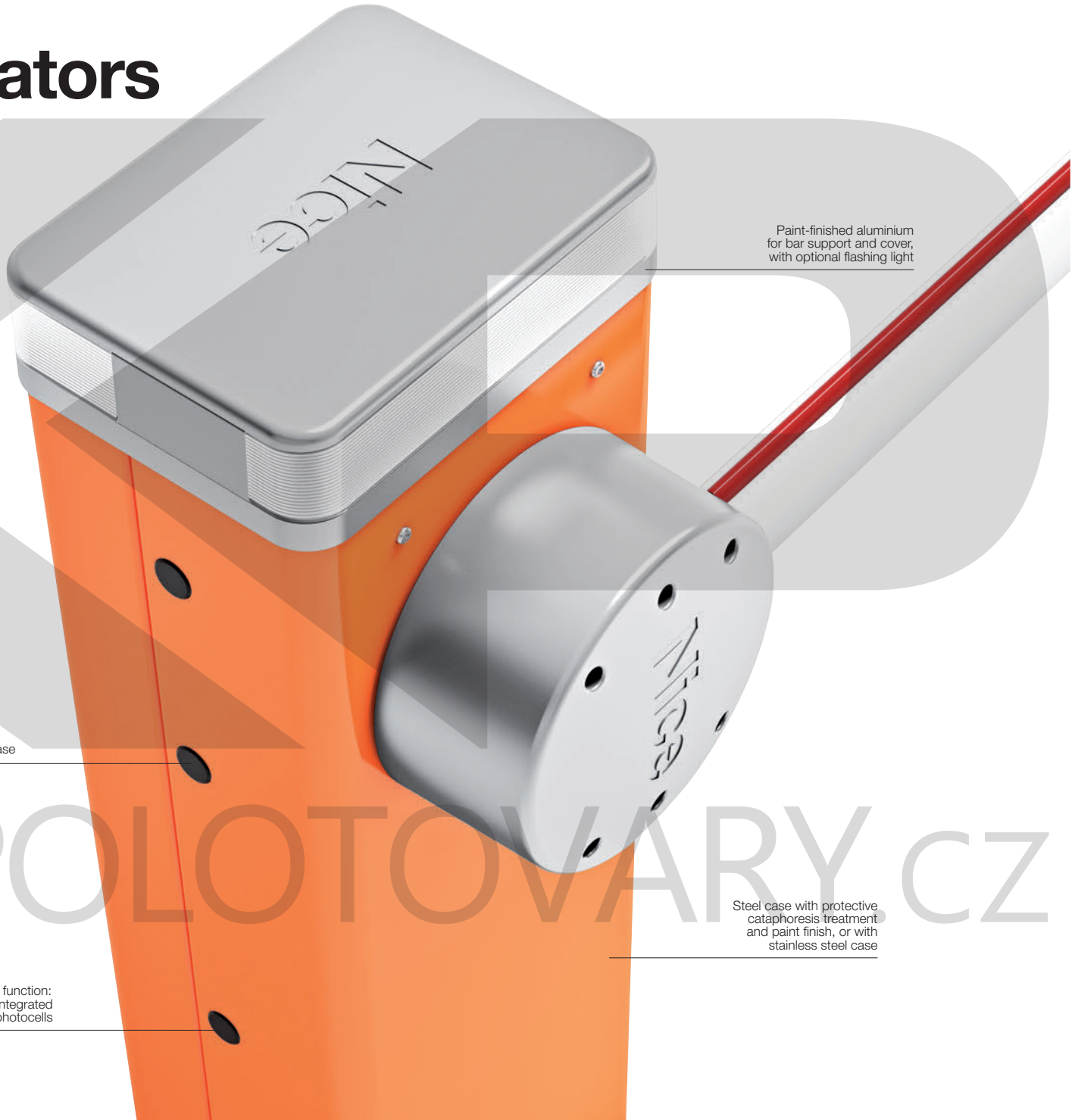

KOVOPOLOTOVARY.CZ

Selection guide, composition of bars and accessories

Bars and accessories are not included in the gear motor's code

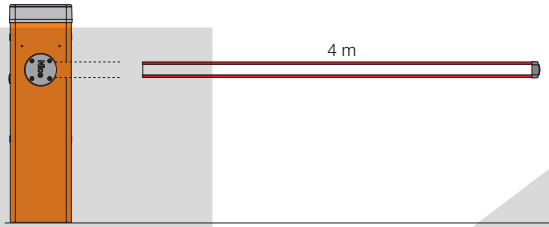

S4BAR
With specific 4 m bar
Designed for:
protective rubber trim,
indicator lights

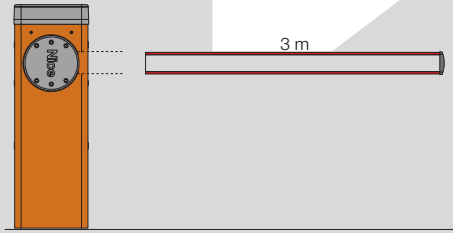

M3BAR
With 3 m bar
Designed for:
protective rubber trim,
indicator lights

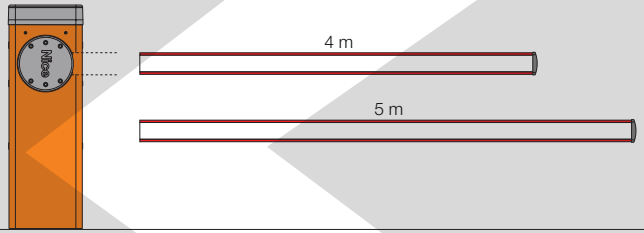

M5BAR
With 4 m bar
Designed for:
protective rubber trim,
indicator lights,
rack (1 pcs),
mobile stand

With 5 m bar
Designed for:
protective rubber trim,
indicator lights,
mobile stand

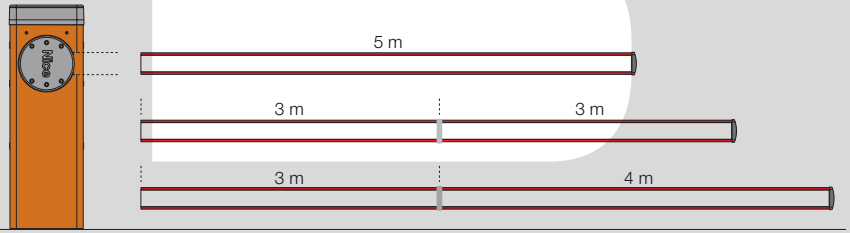

M7BAR
With 5 m bar
Designed for:
protective rubber trim,
indicator lights,
rack (2 pcs),
mobile stand

With 6 m bar (3+3 m)*
Designed for:
protective rubber trim,
indicator lights,
rack (2 pcs),
mobile stand

With 7 m bar (3+4 m)*
Designed for:
protective rubber trim,
indicator lights,
mobile stand

* Use XBA9 joint to assemble bars

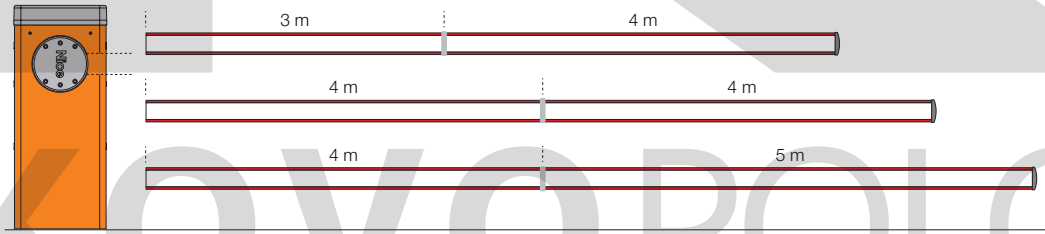

L9BAR
With 7 m bar (3+4 m)*
Designed for:
protective rubber trim,
indicator lights,
rack (3 pcs),
mobile stand

With 8 m bar (4+4 m)*
Designed for:
protective rubber trim,
indicator lights,
rack (3 pcs),
mobile stand

With 9 m bar (4+5 m)*
Designed for:
protective rubber trim,
indicator lights

* Use XBA9 joint to assemble bars

KOVOPOLOTOVARY.CZ

Nice

BiDi | Yubii | SOLEMYO | OPERA | BLUEBUS | 24V

S-Bar

Electromechanical road barrier system for control of road access

For bar up to 4 m.

24 Vdc gear motor with built-in control unit.

Strength and reliability: tough steel structure, new robust balancing springs guaranteed to 500,000 cycles and elliptical section shaft with high resistance to gusts of wind.

Optional flashing or traffic light can be integrated in cover.

More comfort and safety in programming and maintenance phases: the separate enclosures for electronics and mechanics protect internal parts from potential risks.

Rapid and easy access to the control unit located in the upper section of the barrier body.

Simple fixture of the completely concealed photocells onto the specially designed seats on the barrier body.

More safety and reliability: obstacle detection and monitoring of motor absorption during automation movement.

Automatic fault diagnostics during operation with consequent signalling of fault type through specific flash sequences.

Provision for connection of latest generation optical and resistive sensitive edges (with 8.2 KOhm resistance).

Energy saving: the system sets to standby when not in use to save consumption.

No black out: emergency backup power with the optional batteries housed inside the case.

Release from side with Nice triangular key: can be installed on either side.

Nice **BiDirectional products** indicate the status of the automations and confirm correct reception of the command.

Discover the complete range of BiDirectional products on page 176.

Yubii is the new Nice ecosystem that connects all the automations in the home.

Discover all the benefits of the Yubii system on page 170.

DIMENSIONS

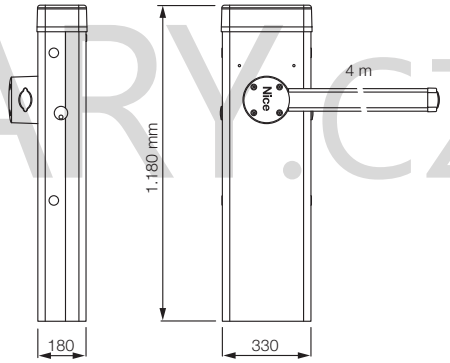

KOVO POLOTOVARY.CZ

COMMON ACCESSORIES

CORE
Nice Wi-Fi-Radio Gateway.

Pc./Pack 1

IBT4N
Interface for connecting the O-View programming unit.

Pc./Pack 1

IT4WIFI
Smart Wi-fi interface to manage gates and garage doors by smartphone (*).

Pc./Pack 1

XBA19
White paint-finished aluminium bar 45x58x4270 mm.

Pc./Pack 1

XBA20
Spare control unit, for S4BAR.

Pc./Pack 1

PS124
24 V battery with integrated battery charger.

Pc./Pack 1

XBA13
Rubber impact protection strip. Length 1 m.

Pc./Pack 9

WA10
Red adhesive reflector strips.

Pc./Pack 24

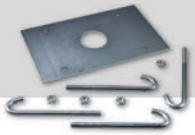

SIA1
nchorage base with clamps.

Pc./Pack 1

XBA7
Integrable flashing light.

Pc./Pack 1

XBA4
Indicator lights for click fixture on upper or lower side of bar. Length 4 m.

Pc./Pack 1

WA11
Adjustable stand for bars.

Pc./Pack 1

SOLEMYO KIT
The solar power to automate gates, garage doors or barrier gates. See page 229.

* Not compatible with the Solemyo kit and PS124

IN ORDER TO HAVE A FULLY FUNCTIONAL BARRIER GATE OPERATOR SYSTEM:

1. CHOOSE THE GEAR MOTOR → 2. SELECT THE BAR → 3. COMPLETE THE SYSTEM WITH THE OPTIONAL ACCESSORIES

TECHNICAL SPECIFICATIONS

With bar up to 4 m, irreversible 230 Vac, 24 Vdc motor, with foundation plate:

Code	Description
S4BAR	With steel case with protective cataphoresis treatment and paint finish
S4BARI	With stainless steel case

Code	S4BAR	S4BARI
ELECTRICAL DATA		
Power supply (Vac 50/60 Hz)	230	
Power supply (Vdc)	24	
Absorption (A)	1	
Power (W)	300	
PERFORMANCE DATA		
Speed (s)	<4	
Torque (Nm)	100	
Work cycle (cycles/hour)*	100	
DIMENSIONAL AND GENERAL DATA		
Protection level (IP)	44	
Working temp. (°C Min/Max)	-20 ÷ +50	
Dimensions (mm)	330x180x1180 h	
Weight (kg)	46	

COMPATIBILITY TABLE WITH CONTROL SYSTEMS AND ACCESSORIES

	receiver				transmitter						photocells											flashing light		
Code	Built-in*	OXI	OXIBD	OXILR	ERA INTI	ERA ONE	ERA ONE BD	ERA ONE LR	ERA FLOR	NICEWAY	EPS	EPM	EPL	EPSB	EPMB	EPLB	EPMOW	EPMOR	F210	FT210	F210B	FT210B	ELAC	ELDC	WLT
S4BAR		•	•	•	•	•	•	•	•	•				•	•	•	•	•			•	•		•	•
S4BARI		•	•	•	•	•	•	•	•	•				•	•	•	•	•			•	•		•	•

* Radio receiver incompatible with Opera system

KOVOPOLOTOVARY.CZ

Nice

BiDi | Yubii | SOLEMYO | OPERA | BLUEBUS | 24V

M-Bar

Electromechanical road barrier system for control of road access

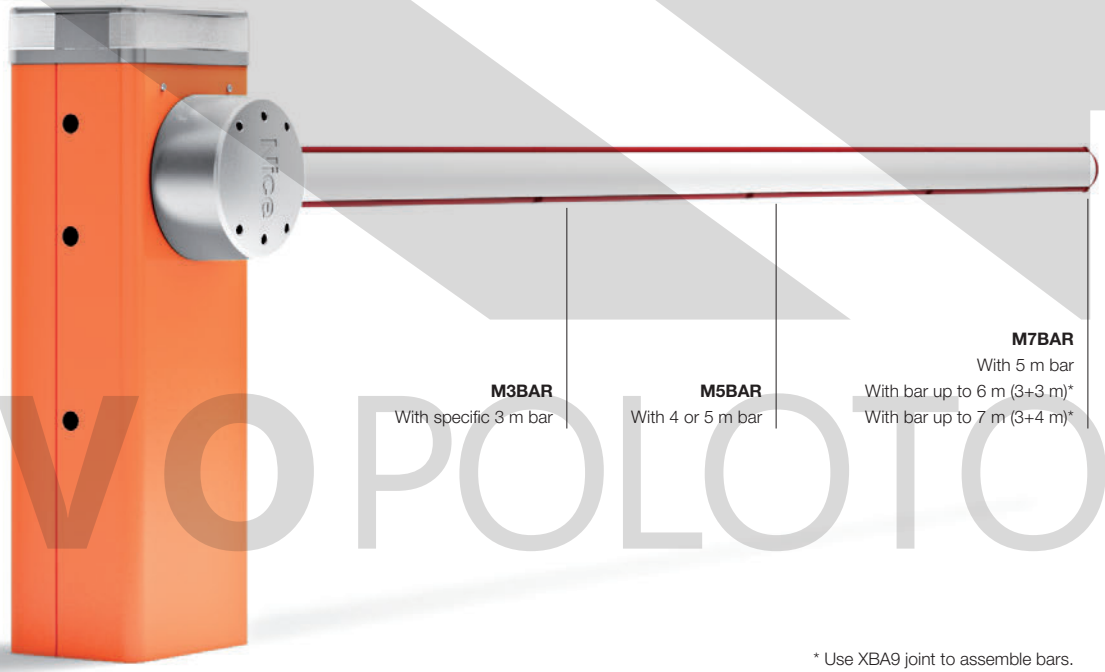

M3BAR
With specific 3 m bar

M5BAR
With 4 or 5 m bar

M7BAR
With 5 m bar
With bar up to 6 m (3+3 m)*
With bar up to 7 m (3+4 m)*

* Use XBA9 joint to assemble bars.

For bars up from 3 to 7 m.

24 Vdc gear motor with built-in control unit.

Simplified programming: control unit with display and joystick to make setting operating parameters even faster.

The control unit has an output to power 24 Vdc devices and two inputs to control loop detectors with the LP21 and LP22 accessories.

Modular: bars are easily assembled using the aluminium expansion joint.

Possibility for intelligent control of two opposing automations thanks to **"master/slave" function**.

Strength and reliability: tough steel structure, new robust balancing springs guaranteed to 2,000,000 cycles and elliptical section shaft with high resistance to gusts of wind.

Optional flashing or traffic light can be integrated in cover.

Encoder movement control and electromechanical limit switches.

More comfort and safety in programming and maintenance phases: the separate enclosures for electronics and mechanics protect internal parts from potential risks.

Rapid and easy access to the control unit located in the upper section of the barrier body.

Simple fixture of the completely concealed photocells onto the specially designed seats on the barrier body.

More safety and reliability: obstacle detection and monitoring of motor absorption during automation movement.

Automatic fault diagnostics during operation with consequent signalling of fault type through specific flash sequences.

Provision for connection of latest generation optical and resistive sensitive edges (with 8.2 KOhm resistance).

Energy saving: the system sets to standby when not in use to save consumption.

No black out: with the optional batteries (PS224) housed inside the gear motor.

Release from side with metal key: can be installed on either side.

Nice **BiDirectional products** indicate the status of the automations and confirm correct reception of the command.

Discover the complete range of BiDirectional products on page 176.

Yubii is the new Nice ecosystem that connects all the automations in the home.

Discover all the benefits of the Yubii system on page 170.

DIMENSIONS

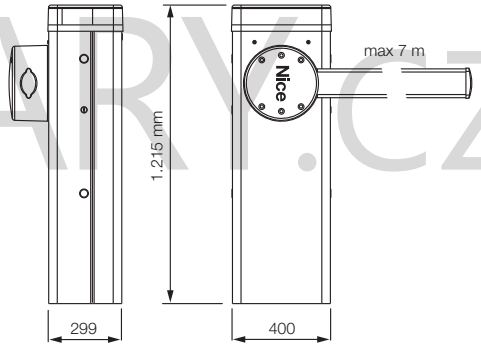

KOVOPOLOTOVARY.CZ

COMMON ACCESSORIES

CORE
Nice Wi-Fi-Radio Gateway.

Pc./Pack 1

IBT4N
Interface for connecting the O-View programming unit.

Pc./Pack 1

IT4WIFI
Smart Wi-fi interface to manage gates and garage doors by smartphone (*).

Pc./Pack 1

BCU1
Spare control unit.

Pc./Pack 1

PS224
24 Vdc buffer batter.

Pc./Pack 1

LP21
Magnetic loop detector 1 channel.

Pc./Pack 1

LP22
Magnetic loop detector 2 channels.

Pc./Pack 1

SOLEMYO KIT
The solar power to automate gates, garage doors or barrier gates.

See page 229.

* Not compatible with the Solemyo kit and PS224

IN ORDER TO HAVE A FULLY FUNCTIONAL BARRIER GATE OPERATOR SYSTEM:

1. CHOOSE THE GEAR MOTOR → 2. SELECT THE BAR → 3. COMPLETE THE SYSTEM WITH THE OPTIONAL ACCESSORIES

TECHNICAL SPECIFICATIONS

With bar up to 3 m, irreversible 230 Vac, 24 Vdc motor, with foundation plate:

Code	Description
M3BAR	With steel case with protective cataphoresis treatment and paint finish. For intensive use
M3BARI	With stainless steel case

With bar up to 4 or 5 m, irreversible 230 Vac, 24 Vdc motor, with foundation plate:

Code	Description
M5BAR	With steel case with protective cataphoresis treatment and paint finish. For intensive use
M5BARI	With stainless steel case

With bar up to 5, 6 or 7 m, irreversible 230 Vac, 24 Vdc motor, with foundation plate:

Code	Description
M7BAR	With steel case with protective cataphoresis treatment and paint finish
M7BARI	With stainless steel case

Code	M3BAR	M3BARI	M5BAR	M5BARI	M7BAR	M7BARI
ELECTRICAL DATA						
Power supply (Vac 50/60 Hz)	230					
Power supply (Vdc)	24					
Absorption (A)	1,3		1,1		1,1	
Power (W)	150		110		110	
PERFORMANCE DATA						
Speed min.÷max. (s)	1,5 ÷ 4		3 ÷ 6		6 ÷ 10	
Torque (Nm)	100		200		300	
Work cycle (cycles/hour)	600		450		200	
DIMENSIONAL AND GENERAL DATA						
Protection level (IP)	54					
Working temp. (°C Min/Max)	-20 ÷ +55					
Dimensions (mm)	400x299x1215 h					
Weight (kg)	80				85	

COMPATIBILITY TABLE WITH CONTROL SYSTEMS AND ACCESSORIES

	receiver				transmitter						photocells											flashing light		
Code	Built-in*	OXI	OXIBD	OXILR	ERA INTI	ERA ONE	ERA ONE BD	ERA ONE LR	ERA FLOR	NICEWAY	EPS	EPM	EPL	EPSB	EPMB	EPLB	EPMOW	EPMOR	F210	FT210	F210B	FT210B	ELAC	ELDC	WLT
M3BAR / M3BARI		•	•	•	•	•	•	•	•	•				•	•	•	•	•			•	•		•	•
M5BAR / M5BARI		•	•	•	•	•	•	•	•	•				•	•	•	•	•			•	•		•	•
M7BAR / M7BARI		•	•	•	•	•	•	•	•	•				•	•	•	•	•			•	•		•	•

* Radio receiver incompatible with Opera system

KOVOPOLOTOVARY.CZ

Accessories M-Bar

COMMON ACCESSORIES

XBA13
Rubber impact protection strip. Length 1 m.

Pc./Pack 9

WA10
Red adhesive reflector strips.

Pc./Pack 24

XBA8
Integrable traffic light.

Pc./Pack 1

XBA7
Integrable flashing light.

Pc./Pack 1

XBA16
nchorage base with clamps.

Pc./Pack 1

WA11
Adjustable stand for bars.

Pc./Pack 1

BARS FOR M3BAR

XBA15
White paint-finished aluminium bar 69x92x3150 mm.

Pc./Pack 1

ACCESSORIES FOR M3BAR

XBA4
Indicator lights for click fixture on upper or lower side of bar. Length 4 m.

Pc./Pack 1

XBA10
Pivot joint for bars up to 4 m.

Pc./Pack 1

XBA11
Joint for bars (from 1950 mm to 2400 mm).

Pc./Pack 1

KOVOPOLOTOVARY.CZ

BARS FOR M5BAR

XBA14
White paint-finished aluminium bar 69x92x4150 mm.

Pc./Pack 1

XBA5
White paint-finished aluminium bar 69x92x5150 mm.

Pc./Pack 1

ACCESSORIES FOR M5BAR

XBA4
Indicator lights for click fixture on upper or lower side of bar. Length 4 m.

Pc./Pack 1

XBA6
Indicator lights for click fixture on upper or lower side of bar. Length 6 m.

Pc./Pack 1

XBA10
Pivot joint for bars up to 4 m.

Pc./Pack 1

XBA11
Joint for bars (from 1950 mm to 2400 mm).

Pc./Pack 1

WA12
Mobile stand for bars - new fully reinforced version.

Pc./Pack 1

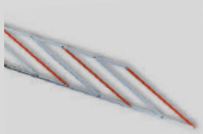

WA13
Aluminium rack up to 2 m.

Pc./Pack 1

BARS FOR M7BAR

XBA15
White paint-finished aluminium bar 69x92x3150 mm.

Pc./Pack 1

XBA14
White paint-finished aluminium bar 69x92x4150 mm.

Pc./Pack 1

XBA5
White paint-finished aluminium bar 69x92x5150 mm.

Pc./Pack 1

ACCESSORIES FOR M7BAR

XBA9
Expansion joint.

Pc./Pack 1

XBA6
Indicator lights for click fixture on upper or lower side of bar. Length 6 m.

Pc./Pack 1

XBA18
Indicator lights for click fixture on upper or lower side of bar. Length 8 m.

Pc./Pack 1

WA12
Mobile stand for bars - new fully reinforced version.

Pc./Pack 1

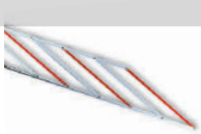

WA13
Aluminium rack up to 2 m.

Pc./Pack 1

KOVOPOLOTOVARY.CZ

Nice

BiDi | Yubii | SOLEMYO | OPERA | BLUEBUS | 24V

L-Bar

Electromechanical road barrier system for control of road access

Powerful and fast, for bars from 7 to 9 m.

24 Vdc gear motor with built-in control unit.

Simplified programming: control unit with display and joystick to make setting operating parameters even faster.

The control unit has an output to power 24 Vdc devices and two inputs to control loop detectors with the LP21 and LP22 accessories.

Modular: bars are easily assembled using the aluminium expansion joint.

Possibility for intelligent control of two opposing automations thanks to **"master/slave" function**.

Strength and reliability: tough steel structure, new robust balancing springs guaranteed to 2,000,000 cycles and elliptical section shaft with high resistance to gusts of wind.

Optional flashing or traffic light can be integrated in cover.

Encoder movement control and electromechanical limit switches.

More comfort and safety in programming and maintenance phases: the separate enclosures for electronics and mechanics protect internal parts from potential risks.

Rapid and easy access to the control unit located in the upper section of the barrier body.

Simple fixture of the completely concealed photocells onto the specially designed seats on the barrier body.

More safety and reliability: obstacle detection and monitoring of motor absorption during automation movement.

Automatic fault diagnostics during operation with consequent signalling of fault type through specific flash sequences.

Provision for connection of latest generation optical and resistive sensitive edges (with 8.2 KOhm resistance).

Energy saving: the system sets to standby when not in use to save consumption.

No black out: with the optional batteries (PS224) housed inside the gear motor.

Release from side with metal key: can be installed on either side.

Nice **BiDirectional products** indicate the status of the automations and confirm correct reception of the command.

Discover the complete range of BiDirectional products on page 176.

Yubii is the new Nice ecosystem that connects all the automations in the home.

Discover all the benefits of the Yubii system on page 170.

DIMENSIONS

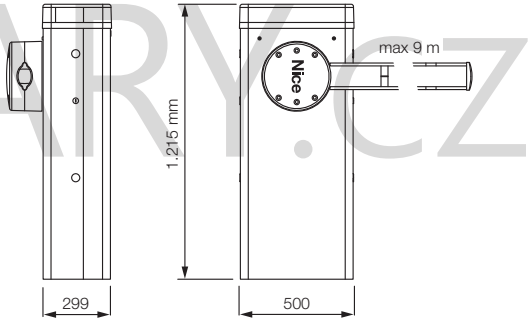

KOVO POLOTOVARY.cz

COMMON ACCESSORIES

CORE
Nice Wi-Fi-Radio Gateway.

Pc./Pack 1

IBT4N
Interface for connecting the O-View programming unit.

Pc./Pack 1

IT4WIFI
Smart Wi-fi interface to manage gates and garage doors by smartphone (*).

Pc./Pack 1

BCU1
Spare control unit.

Pc./Pack 1

PS224
24 Vdc buffer batter.

Pc./Pack 1

LP21
Magnetic loop detector 1 channel.

Pc./Pack 1

LP22
Magnetic loop detector 2 channels.

Pc./Pack 1

SOLEMYO KIT
The solar power to automate gates, garage doors or barrier gates.

See page 229.

* Not compatible with the Solemyo kit and PS224

IN ORDER TO HAVE A FULLY FUNCTIONAL BARRIER GATE OPERATOR SYSTEM:

1. CHOOSE THE GEAR MOTOR → 2. SELECT THE BAR → 3. COMPLETE THE SYSTEM WITH THE OPTIONAL ACCESSORIES

TECHNICAL SPECIFICATIONS

With bar up to 9 m, irreversible 230 Vac, 24 Vdc motor, with foundation plate:

Code	Description
L9BAR	With steel case with protective cataphoresis treatment and paint finish
L9BARI	With stainless steel case

Code	L9BAR	L9BARI
ELECTRICAL DATA		
Power supply (Vac 50/60 Hz)	230	
Power supply (Vdc)	24	
Absorption (A)	1,3	
Power (W)	160	
PERFORMANCE DATA		
Speed min.÷max. (s)	8 ÷ 12	
Torque (Nm)	400	
Work cycle (cycles/hour)	150	
DIMENSIONAL AND GENERAL DATA		
Protection level (IP)	54	
Working temp. (°C Min/Max)	-20 ÷ +55	
Dimensions (mm)	500x299x1215 h	
Weight (kg)	98	

COMPATIBILITY TABLE WITH CONTROL SYSTEMS AND ACCESSORIES

	receiver				transmitter						photocells											flashing light		
Code	Built-in*	OXI	OXIBD	OXILR	ERA INTI	ERA ONE	ERA ONE BD	ERA ONE LR	ERA FLOR	NICEWAY	EPS	EPM	EPL	EPSB	EPMB	EPLB	EPMOW	EPMOR	F210	FT210	F210B	FT210B	ELAC	ELDC	WLT
L9BAR / L9BARI		•	•	•	•	•	•	•	•	•				•	•	•	•	•			•	•		•	•

* Radio receiver incompatible with Opera system

KOVO POLOTOVARY.CZ

Accessories L-Bar

BARS

XBA15
White paint-finished aluminium bar 69x92x3150 mm.

Pc./Pack 1

XBA14
White paint-finished aluminium bar 69x92x4150 mm.

Pc./Pack 1

XBA5
White paint-finished aluminium bar 69x92x5150 mm.

Pc./Pack 1

XBA9
Expansion joint.

Pc./Pack 1

XBA18
Indicator lights for click fixture on upper or lower side of bar. Length 8 m.

Pc./Pack 1

XBA8
Integrable traffic light.

Pc./Pack 1

XBA7
Integrable flashing light.

Pc./Pack 1

XBA13
Rubber impact protection strip. Length 1 m.

Pc./Pack 9

WA10
Red adhesive reflector strips.

Pc./Pack 24

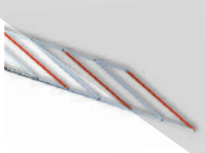

WA13
Aluminium rack up to 2 m.

Pc./Pack 1

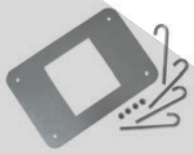

XBA17
nchorage base with clamps.

Pc./Pack 1

WA12
Mobile stand for bars - new fully reinforced version.

Pc./Pack 1

WA11
Adjustable stand for bars.

Pc./Pack 1

KOVOPOLOTOVARY.CZ

DVOPOLOTOVARY.CZ

Nice Wide, solid and essential

EASY TO INSTALL
Large front door for quick and easy access. The bar can be assembled either on the right or left. Easily removable reinforced gear motor support.

VANDAL-PROOF SAFETY
Photocells integrated inside the barrier body, minimum visual impact and maximum protection.

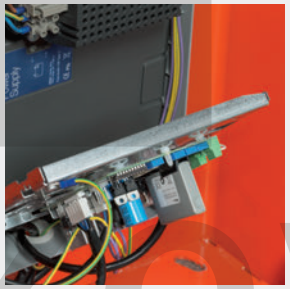

PRACTICAL TO MAINTAIN
The built-in control unit can be removed to simplify wiring and maintenance. A backup battery installed inside the control unit prevents blackout problems.

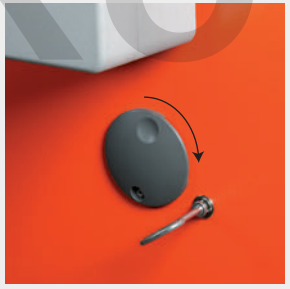

COMFORTABLE AND INTUITIVE RELEASE
Easy release of barrier system thanks to a triangular key.

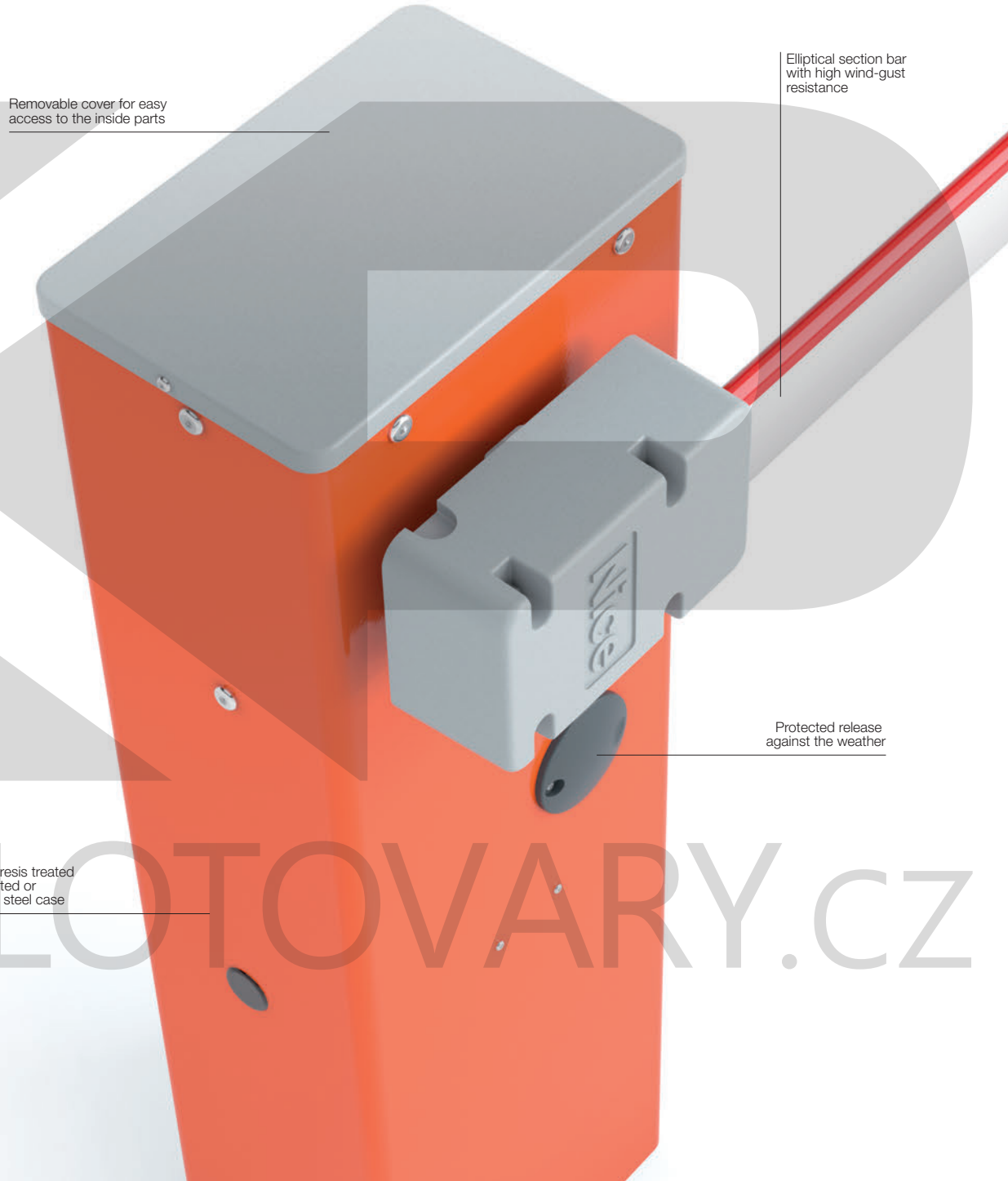

KOVOPOLOTOVARY.CZ

Selection guide, composition of bars and accessories

Bars and accessories are not included in the gear motor's code

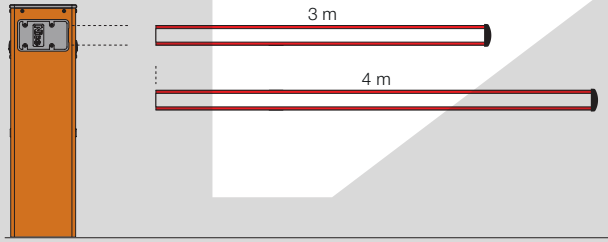

280 mm

WIDES
With 3 m bar
Designed for:
protective rubber trim,
indicator lights,
pivot joint,
rack (1 pcs)

With 4 m bar
Designed for:
protective rubber trim,
indicator lights,
pivot joint

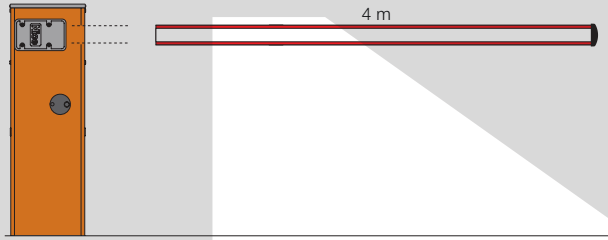

320 mm

WIDEM
With 4 m bar
Designed for:
protective rubber trim,
indicator lights,
pivot joint,
pivot joint,
rack (2 pcs),
mobile stand

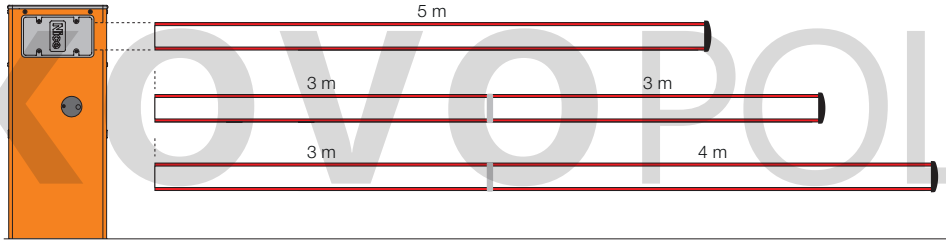

420 mm

WIDEL
With 5 m bar
Designed for:
protective rubber trim,
indicator lights,
rack (2 pcs),
mobile stand

With 6 m bar (3+3 m)*
Designed for:
protective rubber trim,
indicator lights,
rack (2 pcs),
mobile stand

With 7 m bar (3+4 m)*
Designed for:
protective rubber trim,
indicator lights

* Use XBA9 joint to assemble bars

KOVOPLOTOVARY.CZ

Nice

BiDi Yubii 24V

Wide System

Electromechanical road barrier system for control of road access

24 Vdc gear motor, with built-in control unit, adjustable speed and anti-crush safety function.

Two types of case available, galvanized steel or stainless steel (AISI 304) in **three sizes from 3 to 7 metres long**.

More comfort and safety in programming and maintenance phases: The same built-in control unit is used on all versions, and is installed in the bottom part of the barrier body.

Large front door for quick and easy access.

Easily-removable reinforced gear motor support.

Maximum safety: when both opening and closing; barrier body supports on the inside for minimum visual impact.

Electronically-adjustable speed from 3.5" (Wide M) to 5" (Wide L) for fast opening.

Sturdiness, reliability and easy installation: elliptical section bar for lighter weight and higher wind-gust resistance; special profile for fast assembly of the accessories.

Optional pivot joint to protect the barrier in the event of collision.

The bar can be assembled either on the right or left.

Easy to balance, thanks to practical spring tension adjustment.

No black out: operation is guaranteed in the event of power outages by the PS234 backup battery installed inside the control unit.

Release with triangular key protected against the weather.

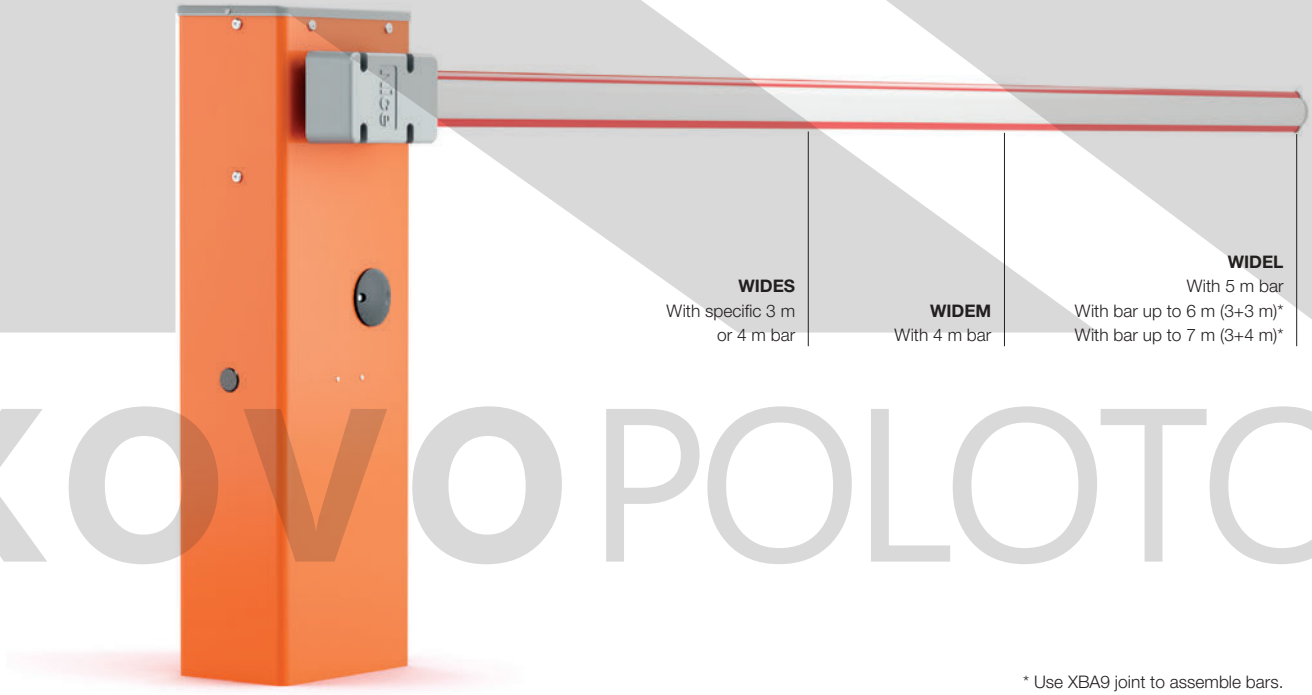

WIDES
With specific 3 m
or 4 m bar

WIDEM
With 4 m bar

WIDEL
With 5 m bar
With bar up to 6 m (3+3 m)*
With bar up to 7 m (3+4 m)*

* Use XBA9 joint to assemble bars.

Nice **BiDirectional products** indicate the status of the automations and confirm correct reception of the command.

Discover the complete range of BiDirectional products on page 176.

Yubii is the new Nice ecosystem that connects all the automations in the home.

Discover all the benefits of the Yubii system on page 170.

DIMENSIONS

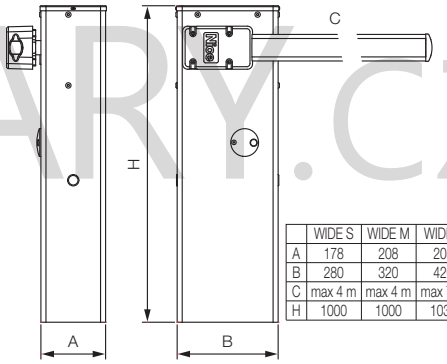

	WIDE S	WIDE M	WIDE L
A	178	208	205
B	280	320	420
C	max 4 m	max 4 m	max 7 m
H	1000	1000	1030

KOVO POLOTOVARY.CZ

COMMON ACCESSORIES

CORE
Nice Wi-Fi-Radio Gateway.

Pc./Pack 1

WIA20
Spare control unit.

Pc./Pack 1

PS324
24 V battery with integrated battery charger.

Pc./Pack 1

XBA13
Rubber impact protection strip. Length 1 m.

Pc./Pack 9

WA10
Red adhesive reflector strips.

Pc./Pack 24

WA11
Adjustable stand for bars.

Pc./Pack 1

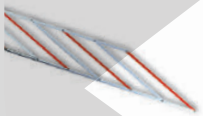

WA13
Aluminium rack up to 2 m.

Pc./Pack 1

IN ORDER TO HAVE A FULLY FUNCTIONAL BARRIER GATE OPERATOR SYSTEM:

1. CHOOSE THE GEAR MOTOR → 2. SELECT THE BAR → 3. COMPLETE THE SYSTEM WITH THE OPTIONAL ACCESSORIES

TECHNICAL SPECIFICATIONS

With bar up to 4 m, irreversibile 230 Vac, irreversible 230 Vac, 24 Vdc motor, with foundation plate: !da duplicazione!

Code	Description
WIDES	With painted galvanised steel case
WIDESI	With stainless steel case
WIDEM	With painted galvanised steel case
WIDEMI	With stainless steel case

With bar up to 7 m, irreversibile 230 Vac, irreversible 230 Vac, 24 Vdc motor, with foundation plate: !da duplicazione!

Code	Description
WIDEL	With painted galvanised steel case
WIDELI	With stainless steel case

Code	WIDES	WIDESI	WIDEM	WIDEMI	WIDEL	WIDELI
ELECTRICAL DATA						
Power supply (Vac 50/60 Hz)	230					
Power supply (Vdc)	24					
Absorption (A)	1		1,1		0,6	
Power (W)	300				360	
PERFORMANCE DATA						
Speed (s)	4		3,5		5	
Torque (Nm)	100		140		200	
Work cycle (cycles/hour)	100		300		200	
DIMENSIONAL AND GENERAL DATA						
Protection level (IP)	54					
Working temp. (°C Min/Max)	-20 ÷ +50					
Dimensions (mm)	280x178x1000 h		320x205x1000 h		420x205x1030 h	
Weight (kg)	40		46		54	

COMPATIBILITY TABLE WITH CONTROL SYSTEMS AND ACCESSORIES

	receiver				transmitter						photocells										flashing light		
Code	Built-in*	OXI	OXIBD	OXILR	ERA INTI	ERA ONE	ERA ONE BD	ERA ONE LR	ERA FLOR	NICEWAY	EPS	EPM	EPL	EPSB	EPMB	EPLB	EPMOR	F210	FT210	F210B	FT210B	ELAC	ELDC	WLT
WIDES / WIDESI		•	•	•	•	•	•	•	•	•	•	•	•				•	•	•				•	
WIDEM / WIDEMI		•	•	•	•	•	•	•	•	•	•	•	•				•	•	•				•	
WIDEL / WIDELI		•	•	•	•	•	•	•	•	•	•	•	•				•	•	•				•	

* Radio receiver incompatible with Opera system

KOVOPOLOTOVARY.CZ

Accessories Wide

BARS FOR WIDE S

XBA19
White paint-finished aluminium bar 45x58x4270 mm.

Pc./Pack 1

ACCESSORIES FOR WIDE S

XBA4
Indicator lights for click fixture on upper or lower side of bar. Length 4 m.

Pc./Pack 1

WIA10
Pivot joint.

Pc./Pack 1

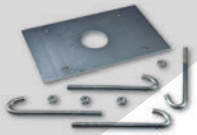

SIA1
nchorage base with clamps.

Pc./Pack 1

BARS FOR WIDE M

XBA19
White paint-finished aluminium bar 45x58x4270 mm.

Pc./Pack 1

ACCESSORIES FOR WIDE M

XBA4
Indicator lights for click fixture on upper or lower side of bar. Length 4 m.

Pc./Pack 1

WIA10
Pivot joint.

Pc./Pack 1

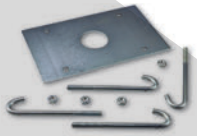

SIA1
nchorage base with clamps.

Pc./Pack 1

WA12
Mobile stand for bars - new fully reinforced version.

Pc./Pack 1

WIA11
Joint for bar for Wide M.

Pc./Pack 1

KOVOPOLOTOVARY.CZ

BARS FOR WIDE L

XBA15
White paint-finished aluminium bar 69x92x3150 mm.

Pc./Pack 1

XBA14
White paint-finished aluminium bar 69x92x4150 mm.

Pc./Pack 1

XBA5
White paint-finished aluminium bar 69x92x5150 mm.

Pc./Pack 1

ACCESSORIES FOR WIDE L

XBA9
Expansion joint.

Pc./Pack 1

XBA6
Indicator lights for click fixture on upper or lower side of bar. Length 6 m.

Pc./Pack 1

XBA18
Indicator lights for click fixture on upper or lower side of bar. Length 8 m.

Pc./Pack 1

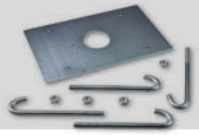

SIA2
nchorage base with clamps.

Pc./Pack 1

WA12
Mobile stand for bars - new fully reinforced version.

Pc./Pack 1

KOVOPOLOTOVARY.CZ

Systems for garage and industrial door

For sectional and up-and-over doors

140. Spykit 550
142. Spykit 650/800 BD
144. Spinbus
148. Spinbuskit 20/22/23 BD
150. Spinkit

For up-and-over and articulated doors

152. Ten
154. Tenkit

For sectional doors

156. Soon
158. Sumo

For folding 2-leaf doors

160. Hyppo 7100

For balanced rolling doors

164. Giro
166. Rondo

KOVOPOLOTOVARY.CZ

Selection guide

For sectional and up-and-over doors, also available in kit with bidirectional technology

Irreversible, 24 Vdc, with built-in control unit, transmission with rack on the rail.
Spykit HS
pages 36/37

Spykit, Spykit BD
pages 140/143

with BlueBUS technology. Compatible for operation with Solemyo and Opera

- for sectional doors up to 10.5 m² for up-and-over doors up to 11.5 m² → **SPY650BDKCE**
  - Hi-Speed → **SPY650HSBDKCE**
- for sectional doors up to 12.5 m² for up-and-over doors up to 14 m² → **SPY800BDKCE**

- for sectional doors up to 9 m² for up-and-over doors up to 10.5 m² → **SPY550KCE**

For sectional and up-and-over doors, also available in kit with bidirectional technology

Irreversible, 24 Vdc, with built-in control unit and BlueBUS technology. Compatible for operation with Solemyo and Opera.
Spinbus
Spinbuskit BD
pages 144/149

- for sectional doors up to 12 m² and for up-and-over doors up to 11.8 m²
  - guide in three 1-metre sections → **SPIN30**
  - without guide → **SN6031**
- for sectional doors up to 12.5 m² and for up-and-over doors up to 11.8 m². Guide in three 1-metre sections → **SPIN40**
- for sectional doors up to 17.7 m² and for up-and-over doors up to 14.7 m². Without guide → **SN6041**

KIT — for sectional doors up to 10.5 m² and for up-and-over doors up to 11.9 m²

- complete with guide in three 1-metre sections → **SPIN20BDKCE**
- complete with guide in one 3-metre section + one 1-metre section → **SPIN22BDKCE**
- complete with guide in one 3-metre section → **SPIN23BDKCE**

KOVOPOLOTOVARY.CZ

For sectional and up-and-over doors, in kit

Irreversible, 230 Vac, with built-in control unit and receiver. Compatible for operation with Opera.
Spinkit
pages 150/151

for sectional doors up to 8.8 m² and for up-and-over doors up to 9.8 m²

- complete with guide in three 1-metre sections → **SPIN10KCE**
- complete with guide in one 3-metre section → **SPIN11KCE**

For up-and-over doors, also available in kit

Irreversible, 24 Vdc. Built-in LED courtesy light.
Ten
Tenkit
pages 152/155

- with built-in control unit
  - with built-in BlueBUS technology, compatible for operation with Solemyo and Opera → for doors up to 9/16 m² → **TN2010L**
  - with built-in receiver and electromechanical limit switch. Compatible for operation with Opera → for doors up to 9/16 m² → **TN2030L**
- without built-in control unit → for doors up to 9/16 m² → **TN2020L**
- Kit, with built-in control unit and receiver and electromechanical limit switch. Compatible for operation with Opera → for doors up to 9 m² → **TNLKCE**

KOVOPOLOTOVARY.CZ

Selection guide

For sectional doors, ideal for industrial and commercial use

Irreversible with built-in control unit, courtesy LED light, 24 Vdc motor, with absolute encoder and incorporated BlueBUS technology. Compatible for operation with Solemyo and Opera.

Soon
pages 156/157

→ for doors up to 20 m² → **SO2000**

For sectional and sliding 2-leaf doors for industrial and commercial use

Irreversible, 24 Vdc motor, with magnetic encoder, with no need for limit switch adjustment.

Sumo
pages 158/159

IP44
- cruising speed, up to 35 m² → **SU2000**
- increased speed, up to 25 m² → **SU2000V**
- high speed, up to 15 m² → **SU2000VV**

IP54, up to 35 m² → **SU2010**

KOVOPOLOTOVARY.CZ

For folding 2-leaf doors

Irreversible
with telescopic arm.
Hyppo
pages 160/161

230 Vac with limit switch on opening and closing.
Compatible with control units with BlueBUS technology, Solemyo and Opera → **HY7100**

24 Vdc version with magnetic encoder.
Compatible with control units with BlueBUS technology, Solemyo and Opera → **HY7124**

KOVOPOLOTOVARY.CZ

Nice

OPERA 24V

Spykit 550

For sectional doors up to 9 m² and up-and-over doors (including canopy doors) up to 10.5 m²

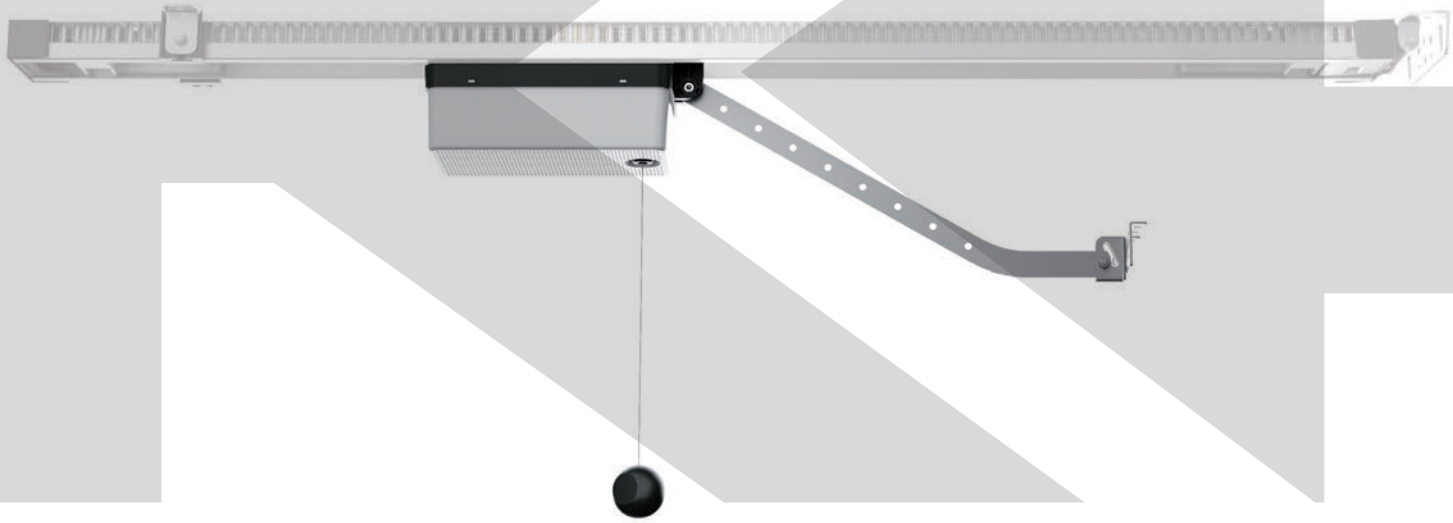

24 Vdc irreversible electromechanical gear motor for residential use, transmission with rack on the rail.

To be combined with SPYRAIL321, SPYRAIL162 and SPYRAIL081 rails.

Functional and stylish: the motor is the only component that moves on the rail, there are no chains or other noisy mechanisms. Ideal for any architectural context.

Handy: Separate control unit: more practical and convenient for programming and maintenance. Built-in LED courtesy light. Three practical keys to control the automation.

Quick to install: modular rail with assembly accessories. Limit switches easy to position along the rail with no need to stand and work on the ceiling. No chains or other noisy mechanisms to install.

Easy to program: simple and fast basic programming, using the Quick Setup procedure. Simplified advanced programming, using O-View.

ON/OFF release system: pulling the release knob once releases the motor; pulling it a second time blocks the motor again, in any position along the rail.

Inexpensive to run and environmentally-friendly: when connected to the mains in standby mode, the control unit consumes 1.5 W.

Safe: obstacle detection, motor power monitoring during travel, diagnostic messages via flashing light and courtesy light.

Adjustable acceleration and deceleration at the start and end of each manoeuvre.

Ready for installation of the latest generation 8.2 kOhm resistive sensitive edges.

Optimised logistics: for practical management and transport, the rails are available in different sizes: single 3.2 m long rail, or supplied in two 1.6 m sectionsplus a 0.8 m extension.

The kit contains:

SPY550
1 gearmotor, 550 N.

SPYBOX
1 Control unit with built-in LED courtesy light and receiver.

FLO2RE
1 Transmitter 433.92 MHz, 2 channels.

KOVOPOLOTOVARY.CZ

COMMON ACCESSORIES

IBT4N
Interface for connecting the O-View programming unit.

Pc./Pack 1

IT4WIFI
Smart Wi-fi interface to manage gates and garage doors by smartphone.

Pc./Pack 1

SPA5
Oscillating arm sliding on bearings with optimised structure for projecting up-and-over doors.

Pc./Pack 1

SPA6
Large 585 mm long connecting arm.

Pc./Pack 1

KI1
Outside release kit with metal pull-cord and lock and key.

Pc./Pack 1

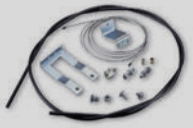

SPA2
Kit for unlocking from the outside with cable.

Pc./Pack 1

TS
Signboard.

Pc./Pack 1

TECHNICAL SPECIFICATIONS

Code	Description	Pack/ Pallet
SPY550KCE	Kit for the automation of sectional and up-and-over doors, 550 N, with SPYBOX control unit and 1 FLO2RE transmitter. Rails not included	48

Code	SPY550KCE
ELECTRICAL DATA	
Power supply (Vac 50/60 Hz)	230 ± 10%
Absorption (A)	1,2
Maximum power (W)	200
Power in standby (W)	1,5
PERFORMANCE DATA	
Maximum speed (m/s)	0,15
Maximum force (N)	550
Nominal force (N)	180
Work cycle (cycles/hour)	20
Working cycle (cycles/day)	200
DIMENSIONAL AND GENERAL DATA	
Protection level (IP)	IP40
Working temp. (°C Min/Max)	-20 ÷ +55
Pack dimensions (mm)	380x380x125 h
Weight (kg)	3,2

RAIL TECHNICAL SPECIFICATIONS

Code	Description	Pack/ Pallet
SPYRAIL321	1 x 3.2 m rail with assembly accessories	48
SPYRAIL162	2 x 1.6 m rails with assembly accessories	48
SPYRAIL081	0.8 m extension with assembly accessories (to add to the other rails so as to reach a length of 4 m)	48

Code	SPYRAIL321	SPYRAIL162	SPYRAIL081*
Type	3.2 m (one section)	3.2 m (2 pcs length 1.6 m)	0.8 m (rails to reach length 4 m)
Installed rail length (mm)	3270		4075
Useful travel (mm)	2710		3515
Weight (kg)	7,5	8,35	3,3
Pack dimensions (mm)	3230x110x50	1760x110x50	960x110x50
Accessories pack dimensions (mm)	400x400x90		

* To be used in combination with SPYRAIL321 e SPYRAIL162 rails

UTILISATION LIMITS

Using the maximum travel

	Non-projecting up-and-over door (with SPA5)		Projecting up-and-over door (with SPA5) or with springs (without SPA5)		Sectional	
	H	L	H	L	H	L
SPY550 with 3.2 m rail	2,3 m	3,5 m	2,8 m	3,5 m	2,5 m	3,6 m
SPY550 with 4 m rail	3,1 m	2,6 m	3,5 m	2,9 m	3,3 m	2,8 m

DIMENSIONS

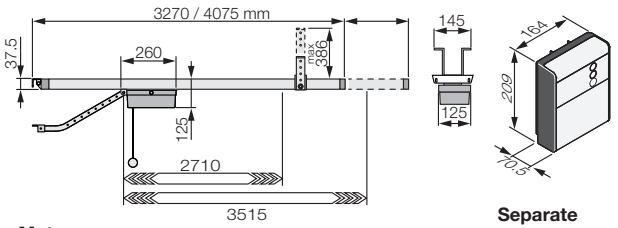

Motor | **Separate control unit**

COMPATIBILITY TABLE WITH CONTROL SYSTEMS AND ACCESSORIES

	receiver				transmitter						photocells											flashing light		
Code	Built-in*	OXI	OXIBD	OXILR	ERA INTI	ERA ONE**	ERA ONE BD**	ERA ONE LR**	ERA FLOR	NICEWAY	EPS	EPM	EPL	EPSB	EPMB	EPLB	EPMOW	EPMOR	F210	FT210	F210B	FT210B	ELAC	ELDC	WLT
SPYBOX	•				•	•	•	•	•	•	•	•	•					•	•	•				•	•
SPYBOXB	•	•	•	•	•	•	•	•	•	•				•	•	•	•	•			•	•		•	•

* Radio receiver incompatible with Opera system
** ERA ONE remote controls, when used with SPYBOX, work as ERA FLOR models

KOVOPOLOTOVARY.CZ

Nice

BiDi Yubii SOLEMYO OPERA

Spykit 650/800 BD

For sectional doors up to 10.5 m² (SPY650) and 12.5 m² (SPY800), up-and-over doors, including canopy doors, up to 11.5 m² (SPY650) and 14 m² (SPY800)

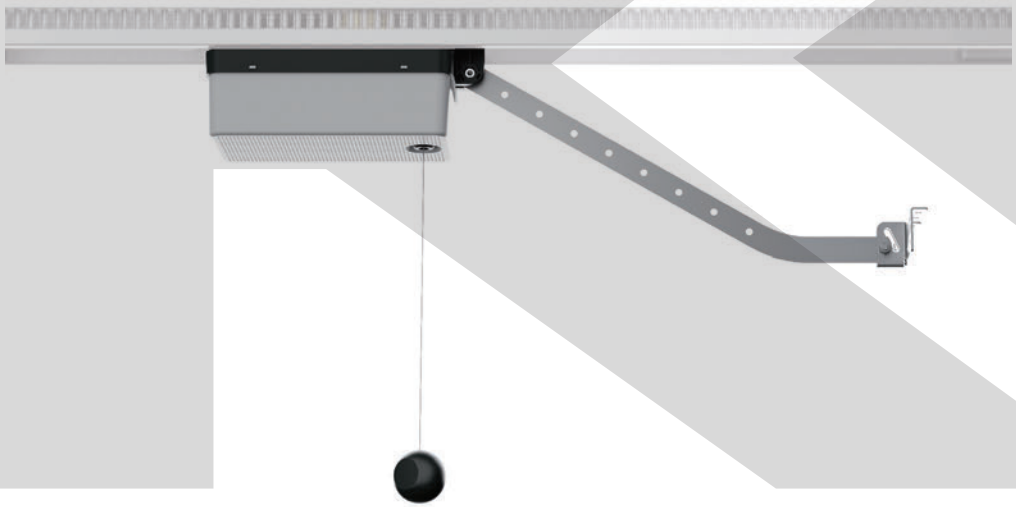

24 Vdc irreversible electromechanical gear motor for residential use, transmission with rack on the rail.

To be combined with SPYRAIL321, SPYRAIL162 and SPYRAIL081 rails.

Functional and stylish: the motor is the only component that moves on the rail, there are no chains or other noisy mechanisms. Ideal for any architectural context.

Handy: Separate control unit: more practical and convenient for programming and maintenance. Built-in LED courtesy light. Three practical keys to control the automation.

Quick to install: modular rail with assembly accessories. Limit switches easy to position along the rail with no need to stand and work on the ceiling. No chains or other noisy mechanisms to install.

Simple to install with the BlueBus system: requiring just two wires for connection between the control unit and the pairs of photocells and other accessories featuring BlueBus technology.

Easy to program: simple and fast basic programming, using the Quick Setup procedure. Simplified advanced programming, using O-View.

ON/OFF release system: pulling the release knob once releases the motor; pulling it a second time blocks the motor again, in any position along the rail.

Inexpensive to run and environmentally-friendly: when connected to the mains in standby mode, the control unit consumes just 0.5 W. When connected to the battery or the Solemyo kit, power consumption in standby mode is reduced to 0.1 W.

No black out: operation is guaranteed even when mains power is not available, thanks to the optional PS324 backup battery.

Safe: obstacle detection, motor power monitoring during travel, diagnostic messages via flashing light and courtesy light.

Adjustable acceleration and deceleration at the start and end of each manoeuvre.

Ready for installation of the latest generation 8.2 kOhm resistive sensitive edges.

Optimised logistics: for practical management and transport, the rails are available in different sizes: single 3.2 m long rail, or supplied in two 1.6 m sectionsplus a 0.8 m extension.

Nice **BiDirectional products** indicate the status of the automations and confirm correct reception of the command.

Discover the complete range of BiDirectional products on page 176.

Yubii is the new Nice ecosystem that connects all the automations in the home.

Discover all the benefits of the Yubii system on page 170.

NEW

The kit contains:

SPY650BDKCE
1 SPY650 gearmotor, 650 N.

SPY800BDKCE
1 SPY800 gearmotor, 800 N.

SPYBOXB
1 Control unit with LED courtesy light and OXIBD bidirectional radio receiver with connector included.

ON3EBD
1 Transmitter 433.92 MHz, 3 channels, bidirectional

KOVOPOLOTOVARY.CZ

COMMON ACCESSORIES

CORE
Nice Wi-Fi-Radio Gateway.

Pc./Pack 1

SPYLIGHT
LED accessory module for Spyrail (max 2 per Spyrail).

Pc./Pack 1

IBT4N
Interface for connecting the O-View programming unit.

Pc./Pack 1

IT4WIFI
Smart Wi-fi interface to manage gates and garage doors by smartphone (*).

Pc./Pack 1

PS324
24 V battery with integrated battery charger. Requires accessory TNA9 for wall mounting.

Pc./Pack 1

TNA9
Additional connection cable and supports for wall-mounting of PS324 battery.

Pc./Pack 1

SPA5
Oscillating arm sliding on bearings with optimised structure for projecting up-and-over doors.

Pc./Pack 1

SPA6
Large 585 mm long connecting arm.

Pc./Pack 1

SPA10
Kit with additional ceiling fixing bracket for Spyrail.

Pc./Pack 1

KI1
Outside release kit with metal pull-cord and lock and key.

Pc./Pack 1

SPA2
Kit for unlocking from the outside with cable.

Pc./Pack 1

TS
Signboard.

Pc./Pack 1

SOLEMYO KIT
The solar power to automate gates, garage doors or barrier gates. See page 229.

* Not compatible with the Solemyo kit and PS324

TECHNICAL SPECIFICATIONS

Code	Description	Pack/Pallet
SPY650BDKCE	Kit for automating sectional and up-and-over doors, 650 N, with SPYBOXB control unit, OXIBD receiver with connector included and 1 ON3EBD transmitter, with bidirectional technology. Guides not included	48
SPY800BDKCE	Kit for automating sectional and up-and-over doors, 800 N, with SPYBOXB control unit, OXIBD receiver with connector included and 1 ON3EBD transmitter, with bidirectional technology. Guides not included	48

Code	SPY650BDKCE	SPY800BDKCE
ELECTRICAL DATA		
Power supply (Vac 50/60 Hz)	230 ± 10%	
Absorption (A)	1,4	1,6
Maximum power (W)	250	300
Power in standby (W)	0,5	0,5
PERFORMANCE DATA		
Maximum speed (m/s)	0,15	0,14
Maximum force (N)	650	800
Nominal force (N)	200	250
Work cycle (cycles/hour)	30	30
Working cycle (cycles/day)	300	300
DIMENSIONAL AND GENERAL DATA		
Protection level (IP)	IP40	
Working temp. (°C Min/Max)	-20 ÷ +55	
Pack dimensions (mm)	380x380x125	
Weight (kg)	3,2	3,4

RAIL TECHNICAL SPECIFICATIONS

Code	Description	Pack/ Pallet
SPYRAIL321	1 x 3.2 m rail with assembly accessories	48
SPYRAIL162	2 x 1.6 m rails with assembly accessories	48
SPYRAIL081	0.8 m extension with assembly accessories (to add to the other rails so as to reach a length of 4 m)	48

Code	SPYRAIL321	SPYRAIL162	SPYRAIL081*
Type	3.2 m (one section)	3.2 m (2 pcs length 1.6 m)	0.8 m (rails to reach length 4 m)
Installed rail length (mm)	3270		4075
Useful travel (mm)	2710		3515
Weight (kg)	7,5	8,35	3,3
Pack dimensions (mm)	3230x110x50	1760x110x50	960x110x50
Accessories pack dimensions (mm)	400x400x90		

* To be used in combination with SPYRAIL321 e SPYRAIL162 rails

UTILISATION LIMITS

Using the maximum travel

	Non-projecting up-and-over door (with SPA5)		Projecting up-and-over door (with SPA5) or with springs (without SPA5)		Sectional	
	H	L	H	L	H	L
SPY650 with 3.2 m rail	2,3 m	4 m	2,8 m	4 m	2,5 m	4,2 m
SPY650 with 4 m rail	3,1 m	3 m	3,5 m	3,3 m	3,3 m	3,2 m
SPY800 with 3.2 m rail	2,3 m	5 m	2,8 m	5 m	2,5 m	5 m
SPY800 with 4 m rail	3,1 m	3,7 m	3,5 m	4 m	3,3 m	3,8 m

DIMENSIONS

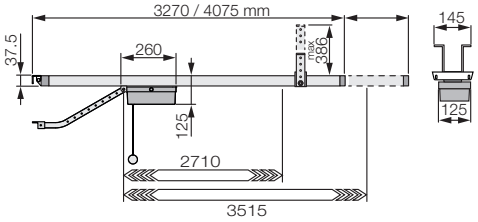

Motor

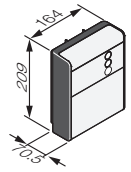

Separate control unit

COMPATIBILITY TABLE WITH CONTROL SYSTEMS AND ACCESSORIES

	receiver				transmitter						photocells											flashing light		
Code	Built-in*	OXI	OXIBD	OXILR	ERA INTI	ERA ONE**	ERA ONE BD**	ERA ONE LR**	ERA FLOR	NICEWAY	EPS	EPM	EPL	EPSB	EPMB	EPLB	EPMOW	EPMOR	F210	FT210	F210B	FT210B	ELAC	ELDC	WLT
SPYBOX	•				•	•	•	•	•	•	•	•	•					•	•	•				•	•
SPYBOXB	•	•	•	•	•	•	•	•	•	•				•	•	•	•	•			•	•		•	•

* Radio receiver incompatible with Opera system
** ERA ONE remote controls, when used with SPYBOX, work as ERA FLOR models

KOV POLOTOVARY.CZ

Nice

BiDi | Yubii | SOLEMYO | OPERA | BLUEBUS | 24V

Spinbus

For sectional doors up to 12.5 m² and up-and-over garage doors up to 11.8 m²

Irreversible electromechanical gear motor, for residential use, with belt drive, 24 Vdc motor, with magnetic encoder.

Complete version of the guide in 3 x1 m sections.

Rapid installation - anywhere! The adjustable head, cord-type release and cable-controlled, step-by-step release can be fitted in any part of the garage in order to actuate the system without a remote control device and without the need to install wall-mounted control units.

Inexpensive to run and environmentally-friendly: with the connection to the mains in standby mode the control unit with radio connected consumes just 0.8 W (SPIN30) and 1.2 W (SPIN40); when connected to a battery or to the Solemyo kit, consumption in standby mode is reduced to 0.036 W.

User-friendly thanks to the BlueBUS system: which enables connection by means of just two wires between the control unit and pair of photocells.

Safe: obstacle detection system and automatic programming of the working times; motor absorption is monitored during movement, self-diagnosis by means of a flashing light and courtesy LED light.

Adjustable acceleration and deceleration at the start and end of each manoeuvre.

Can be connected with latest generation sensitive edges 8.2 KOhm.

Luminous: built-in LED courtesy light able to replace garage lighting.

Three-section guide in galvanised steel with belt drive system, very quiet

By rotating the “petal” which diffuses the light, users access the incorporated BlueBUS control unit

Nice **BiDirectional products** indicate the status of the automations and confirm correct reception of the command.

Discover the complete range of BiDirectional products on page 176.

Yubii is the new Nice ecosystem that connects all the automations in the home.

Discover all the benefits of the Yubii system on page 170.

KOVOPOLOTOVARY.CZ

COMMON ACCESSORIES

CORE
Nice Wi-Fi-Radio Gateway.

Pc./Pack 1

IBT4N
Interface for connecting the O-View programming unit.

Pc./Pack 1

IT4WIFI
Smart Wi-fi interface to manage gates and garage doors by smartphone (*).

Pc./Pack 1

SNA3
Spare control unit, for SPIN30/SN6031.

SNA4
Spare control unit, for SPIN40/SN6041.

PS124
24 V battery with integrated battery charger.

Pc./Pack 1

SPA2
Kit for unlocking from the outside with cable.

Pc./Pack 1

SPA5
Oscillating arm sliding on bearings with optimised structure for projecting up-and-over doors.

Pc./Pack 1

SPA6
Large 585 mm long connecting arm.

Pc./Pack 1

SPA7
Kit of two additional fixing brackets.

Pc./Pack 2

SNA16
Quick-connect brackets for ceiling mounting.

Pc./Pack 10

TS
Signboard.

Pc./Pack 1

SOLEMYO KIT
The solar power to automate gates, garage doors or barrier gates. See page 229.

* Not compatible with the Solemyo kit and PS124

TECHNICAL SPECIFICATIONS

Code	Description	Pack/Pallet
SPIN30	Irreversible, 230 Vac, 24 Vdc motor, with incorporated control unit, 800 N. Complete with guide in three 1 m-sections	15
SPIN40	Irreversible, 230 Vac, 24 Vdc motor, with incorporated control unit, 1000 N. Complete with guide in three 1 m-sections	15

Code	SPIN30	SPIN40
ELECTRICAL DATA		
Power supply (Vac 50/60 Hz)	230	
Absorption (A)	1,3	1,4
Power (W)	300	370
PERFORMANCE DATA		
Speed (rpm)	0,20	
Force (N)	800	1000
Working cycle (cycles/day)	50	
DIMENSIONAL AND GENERAL DATA		
Protection level (IP)	40	
Working temp. (°C Min/Max)	-20 ÷ +55	
Dimensions (mm)	311x327x105 h	
Weight (kg)	3,6	4,7

UTILISATION LIMITS

Using the maximum travel

	Non-projecting up-and-over door		Projecting up-and-over door		Sectional	
	H	L	H	L	H	L
SPIN30	2,2 m	4,2 m	2,8 m	4,2 m	2,4 m	5 m
SPIN40	2,2 m	4,2 m	2,8 m	4,2 m	2,4 m	5,2 m

DIMENSIONS

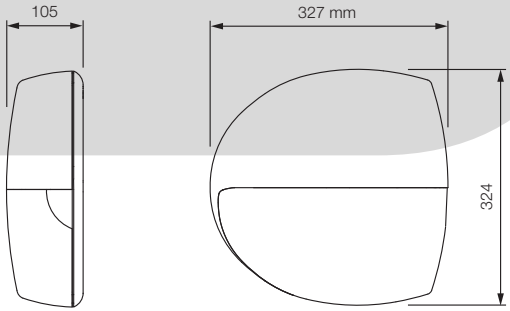

COMPATIBILITY TABLE WITH CONTROL SYSTEMS AND ACCESSORIES

	receiver				transmitter						photocells											flashing light		
Code	Built-in*	OXI	OXIBD	OXILR	ERA INTI	ERA ONE	ERA ONE BD	ERA ONE LR	ERA FLOR	NICEWAY	EPS	EPM	EPL	EPSB	EPMB	EPLB	EPMOW	EPMOR	F210	FT210	F210B	FT210B	ELAC	ELDC	WLT
SPIN30		•	•	•	•	•	•	•	•	•				•	•	•	•	•			•	•		•	•
SPIN40		•	•	•	•	•	•	•	•	•				•	•	•	•	•			•	•		•	•

* Radio receiver incompatible with Opera system

KOVOPOLOTOVARY.CZ

Nice

BiDi | Yubii | SOLEMYO | OPERA | BLUEBUS | 24V

Spinbus

For sectional doors up to 17.5 m² and up-and-over garage doors up to 14.7 m²

Non-reversible electromechanical gear-motor, 230 Vac for residential use, 24 Vdc motor with magnetic encoder.

For use with belt tracks SNA30 - SNA31 or chain tracks SNA30C - SNA31C.

Rapid installation - anywhere! The adjustable head, cord-type release and cable-controlled, step-by-step release can be fitted in any part of the garage in order to actuate the system without a remote control device and without the need to install wall-mounted control units.

Inexpensive to run and environmentally-friendly: when connected to the mains on standby the control unit with radio connected consumes just 0.8 W (SN6031) and 1.2 W (SN6041); when connected to a battery or to the Solemyo kit, consumption in standby mode is reduced to 0.036 W.

User-friendly thanks to the BlueBUS system: which enables connection by means of just two wires between the control unit and pair of photocells.

Safe: obstacle detection system and automatic programming of the working times; motor absorption is monitored during movement, self-diagnosis by means of a flashing light and courtesy LED light.

Adjustable acceleration and deceleration at the start and end of each manoeuvre.

Can be connected with latest generation sensitive edges 8.2 KOhm.

Luminous: built-in LED courtesy light able to replace garage lighting.

By rotating the “petal” which diffuses the light users access the incorporated BlueBUS control unit

Nice **BiDirectional products** indicate the status of the automations and confirm correct reception of the command.

Discover the complete range of BiDirectional products on page 176.

Yubii is the new Nice ecosystem that connects all the automations in the home.

Discover all the benefits of the Yubii system on page 170.

KOVOPOLOTOVARY.CZ

COMMON ACCESSORIES

CORE
Nice Wi-Fi-Radio Gateway.

Pc./Pack 1

IBT4N
Interface for connecting the O-View programming unit.

Pc./Pack 1

IT4WIFI
Smart Wi-fi interface to manage gates and garage doors by smartphone (*).

Pc./Pack 1

SNA3
Spare control unit, for SPIN30/SN6031.

SNA4
Spare control unit, for SPIN40/SN6041.

PS124
24 V battery with integrated battery charger.

Pc./Pack 1

SPA2
Kit for unlocking from the outside with cable.

Pc./Pack 1

SPA5
Oscillating arm sliding on bearings with optimised structure for projecting up-and-over doors.

Pc./Pack 1

SPA6
Large 585 mm long connecting arm.

Pc./Pack 1

SPA7
Kit of two additional fixing brackets.

Pc./Pack 2

SNA16
Quick-connect brackets for ceiling mounting.

Pc./Pack 10

TS
Signboard.

Pc./Pack 1

SOLEMYO KIT
The solar power to automate gates, garage doors or barrier gates. See page 229.

* Not compatible with the Solemyo kit and PS124

TECHNICAL SPECIFICATIONS

Code	Description	Pack/Pallet
SN6031	Irreversible, 230 Vac, 24 Vdc motor, with incorporated control unit, 800 N	15
SN6041	Irreversible, 230 Vac, 24 Vdc motor, with incorporated control unit, 1000 N	15

Code	Description	Pack/Pallet
SNA30	Pre-mounted 3 m belt track	1
SNA31	1 m extension for guide SNA30	1
SNA30C	Pre-mounted 3 m chain track	1
SNA31C	1 m extension for guide SNA30C	1

Code	SN6031	SN6041
ELECTRICAL DATA		
Power supply (Vac 50/60 Hz)	230	
Absorption (A)	1,3	1,4
Power (W)	300	370
PERFORMANCE DATA		
Speed (rpm)	0,20	
Force (N)	800	1000
Working cycle (cycles/day)	50	
DIMENSIONAL AND GENERAL DATA		
Protection level (IP)	40	
Working temp. (°C Min/Max)	-20 ÷ +55	
Dimensions (mm)	311x327x105 h	
Weight (kg)	3,6	4,7

UTILISATION LIMITS

Using the maximum travel

	Non-projecting up-and-over door		Projecting up-and-over door		Sectional	
	H	L	H	L	H	L
SN6031 with SNA30	2,2 m	4,2 m	2,8 m	4,2 m	2,4 m	5 m
SN6041 with SNA30	2,2 m	4,2 m	2,8 m	4,2 m	2,4 m	5,2 m
SN6031 with SNA30 + SNA31	3,2 m	2,9 m	3,5 m	3,4 m	3,4 m	3,5 m
SN6041 with SNA30 + SNA31	3,2 m	4,2 m	3,5 m	4,2 m	3,4 m	5,2 m

DIMENSIONS

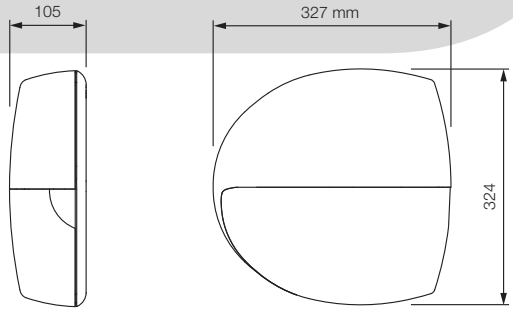

COMPATIBILITY TABLE WITH CONTROL SYSTEMS AND ACCESSORIES

	receiver				transmitter						photocells											flashing light		
Code	Built-in*	OXI	OXIBD	OXILR	ERA INTI	ERA ONE	ERA ONE BD	ERA ONE LR	ERA FLOR	NICEWAY	EPS	EPM	EPL	EPSB	EPMB	EPLB	EPMOW	EPMOR	F210	FT210	F210B	FT210B	ELAC	ELDC	WLT
SN6031		•	•	•	•	•	•	•	•	•				•	•	•	•	•			•	•		•	•
SN6041		•	•	•	•	•	•	•	•	•				•	•	•	•	•			•	•		•	•

* Radio receiver incompatible with Opera system

KOVOPOLOTOVARY.CZ

Nice

BiDi | Yubii | SOLEMYO | OPERA | BLUEBUS | 24V

Spinbuskit 20/22/23 BD

For sectional doors up to 10.5 m² and up-and-over garage doors up to 11.8 m²

Three versions in kit:

- rail in three 1 m pieces SPIN20KCE;
- pre-mounted guide of 4 m (3+1 m) SPIN22KCE;
- with pre-mounted guide of 3 m SPIN23KCE.

Rapid installation - anywhere! The adjustable head, cord-type release and cable-controlled, step-by-step release can be fitted in any part of the garage in order to actuate the system without a remote control device and without the need to install wall-mounted control units.

Inexpensive to run and environmentally-friendly: with mains electricity, the control unit in stand-by with radio connected consumes just 5.2 W; connected to a battery or the Solemyo kit, consumption in stand-by drops to 0.036 W.

User-friendly thanks to the BlueBUS system: which enables connection by means of just two wires between the control unit and pair of photocells.

No black out: operation in event of power failure with optional PS124 batteries insertable in the motor.

Safe: obstacle detection system and automatic programming of the working times; motor absorption is monitored during movement, self-diagnosis by means of a flashing light and courtesy LED light.

Adjustable acceleration and deceleration at the start and end of each manoeuvre.

Can be connected with latest generation sensitive edges 8.2 KOhm.

Built-in **LED courtesy light.**

Nice **BiDirectional products** indicate the status of the automations and confirm correct reception of the command.

Discover the complete range of BiDirectional products on page 176.

Yubii is the new Nice ecosystem that connects all the automations in the home.

Discover all the benefits of the Yubii system on page 170.

NEW

The kit contains:

SN6021
1 SN6021 gearmotor with SNA20 control unit and OXIBD bidirectional radio receiver with connector included.

ON3EBD
1 Transmitter 433.92 MHz, 3 channels, bidirectional

SPIN20KCE
1 Guide in three 1-metre sections.

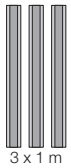

SPIN22KCE
1 Guide in one 3-metre section + one 1-metre section.

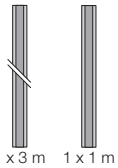

SPIN23KCE
1 Guide in one 3-metre section.

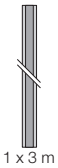

KOVOPLOTOVARY.CZ

COMMON ACCESSORIES

CORE
Nice Wi-Fi-Radio Gateway.

Pc./Pack 1

IBT4N
Interface for connecting the O-View programming unit.

Pc./Pack 1

IT4WIFI
Smart Wi-fi interface to manage gates and garage doors by smartphone (*).

Pc./Pack 1

SNA20
Spare control unit for SPIN20KCE, SPIN22KCE and SPIN23KCE.

PS124
24 V battery with integrated battery charger.

Pc./Pack 1

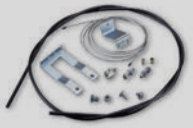

SPA2
Kit for unlocking from the outside with cable.

Pc./Pack 1

SPA5
Oscillating arm sliding on bearings with optimised structure for projecting up-and-over doors.

Pc./Pack 1

SPA6
Large 585 mm long connecting arm.

Pc./Pack 1

SPA7
Kit of two additional fixing brackets.

Pc./Pack 2

SNA16
Quick-connect brackets for ceiling mounting.

Pc./Pack 10

TS
Signboard.

Pc./Pack 1

SOLEMYO KIT
The solar power to automate gates, garage doors or barrier gates.

See page 229.

* Not compatible with the Solemyo kit and PS124

TECHNICAL SPECIFICATIONS

Code	Description	Pack/Pallet
SPIN20BDKCE	Kit to automate sectional and up-and-over doors, with bidirectional technology. Guide in three 1-metre sections	14
SPIN22BDKCE	Kit to automate sectional and up-and-over doors, with bidirectional technology. Guide in one 3-metre section + one 1-metre section	15
SPIN23BDKCE	Kit to automate sectional and up-and-over doors, with bidirectional technology. 3 m guide	15

N.B. The content of the package may vary: consult the retailer.

Code	SN6021
ELECTRICAL DATA	
Power supply (Vac 50/60 Hz)	230
Absorption (A)	0,8
Power (W)	270
PERFORMANCE DATA	
Speed (m/s)	0,20
Force (N)	650
Working cycle (cycles/day)	50
DIMENSIONAL AND GENERAL DATA	
Protection level (IP)	40
Working temp. (°C Min/Max)	-20 ÷ +55
Dimensions (mm)	311x327x105 h
Weight (kg)	3,6

UTILISATION LIMITS

Using the maximum travel

	Non-projecting up-and-over door		Projecting up-and-over door		Sectional	
	H	L	H	L	H	L
SPIN20KCE	2,2 m	4,2 m	2,8 m	4,2 m	2,4 m	4,4 m
SPIN22KCE	3,2 m	2,9 m	3,5 m	3,4 m	3,4 m	3,1 m
SPIN23KCE	2,2 m	4,2 m	2,8 m	4,2 m	2,4 m	4,4 m

DIMENSIONS

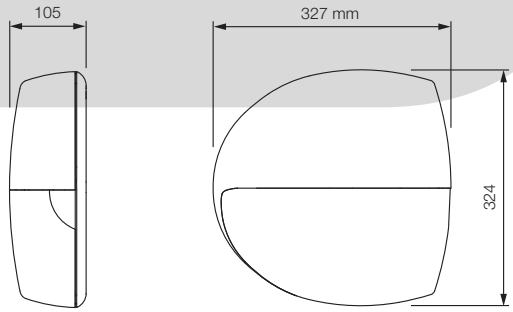

KOVO POLOTOVARY.CZ

Nice

OPERA 24V

Spinkit

For sectional doors up to 8.8 m² and up-and-over garage doors up to 9.8 m², belt drive

Two versions in kit:

- pre-assembled, 3x1 m sections guide SPIN10KCE;
- with pre-assembled 3 m guide SPIN11KCE.

Simplified programming via O-View: thanks to compatibility with the Opera system, the automation system can be managed, programmed and controlled even at a distance, with considerable savings in time.

Advanced: built-in radio card also compatible with Nice Flo and Smilo systems: possibility of memorising up to 100 transmitters! Input for photocells and possibility of connecting photo-test with self-learning function during installation.

Safe: obstacle detection system and automatic programming of the working times; motor absorption is monitored during movement, self-diagnosis by means of a flashing light and courtesy LED light.

Adjustable acceleration and deceleration at the start and end of each manoeuvre.

Can be connected with latest generation sensitive edges 8.2 KOhm.

The kit contains:

SN6011
1 Gear motor SN6011 with incorporated control unit and plug-in receiver.

FLO2RE
1 Transmitter 433.92 MHz, 2 channels.

SPIN10KCE
1 Guide in three 1-metre sections.

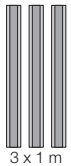

SPIN11KCE
1 Guide in one 3-metre section.

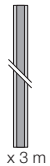

KOVOPLOTOVARY.CZ

COMMON ACCESSORIES

IBT4N
Interface for connecting the O-View programming unit.

Pc./Pack 1

IT4WIFI
Smart Wi-fi interface to manage gates and garage doors by smartphone.

Pc./Pack 1

SNA1
Spare control unit for SPIN10KCE and SPIN11KCE.

SPA2
Kit for unlocking from the outside with cable.

Pc./Pack 1

SPA5
Oscillating arm sliding on bearings with optimised structure for projecting up-and-over doors.

Pc./Pack 1

SPA6
Large 585 mm long connecting arm.

Pc./Pack 1

SPA7
Kit of two additional fixing brackets.

Pc./Pack 2

SNA16
Quick-connect brackets for ceiling mounting.

Pc./Pack 10

TS
Signboard.

Pc./Pack 1

TECHNICAL SPECIFICATIONS

Code	Description
SPIN10KCE	Kit for automating sectional and up-and-over doors. Guide in three 1-metre sections
SPIN11KCE	Kit for automating sectional and up-and-over doors. Pre-mounted guide of 3 m

N.B. The content of the package may vary: consult the retailer.

Code	**SN6011**
ELECTRICAL DATA	
Power supply (Vac 50/60 Hz)	230
Absorption (A)	0,7
Power (W)	200
PERFORMANCE DATA	
Speed (m/s)	0,14
Force (N)	550
Working cycle (cycles/day)	30
DIMENSIONAL AND GENERAL DATA	
Protection level (IP)	40
Working temp. (°C Min/Max)	-20 ÷ +55
Dimensions (mm)	225x330x100 h
Weight (kg)	3,3

UTILISATION LIMITS

Using the maximum travel

	Non-projecting up-and-over door		Projecting up-and-over door		Sectional	
	H	L	H	L	H	L
SPIN10KCE	2,2 m	3,5 m	2,8 m	3,5 m	2,4 m	3,7 m
SPIN11KCE	2,2 m	3,5 m	2,8 m	3,5 m	2,4 m	3,7 m

DIMENSIONS

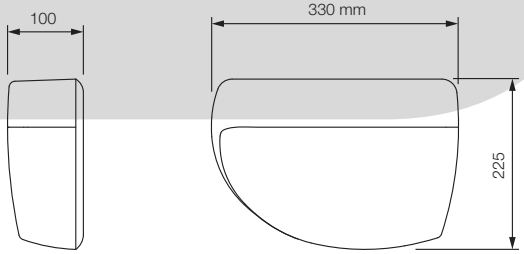

KOVOPOLOTOVARY.CZ

Nice

BiDi | Yubii | SOLEMYO | OPERA | BLUEBUS | 24V

Ten

For projecting and non-projecting up-and-over doors of up to 9 m² and 2.6 m high (up to 16 m² and 2.6 m high using 2 motors)

24 Vdc electromechanical gear motor.

Three versions, standard and upgraded:

- with built-in control unit, force regulator and absolute encoder (TN2010L);
- with incorporated control unit and receiver, electromechanical limit switch (TN2030L);
- without control unit (TN2020L).

Reliable and precise: memorisation of the opening and closing limit switch positions; gradual starting and slowdown during closing.

Safe: obstacle detection system and monitoring of the motor absorption during movement, self-diagnosis by means of a flashing light, courtesy LED light.

The latest generation optical and resistive 8.2 KOhm sensitive edges can also be connected.

Functional: possibility to connect a second motor without control unit TN2020L, to automate doors up to 16 m².

Model TN2030L with built-in radio receiver, also compatible with Nice Flo and Smilo systems.

TN2010L model with BlueBUS technology, with provision for the Solemyo and Opera systems, compatible with the Yubii system and bidirectional receiver.

Advanced: the absolute encoder technology guarantees precision without the need of a limit switch, reliability and the long term safeguard of the set values.

User-friendly: thanks to the BlueBUS technology which enables connection by means of just two wires between the control unit and photocells.

Energy saving: the system enters in stand-by when not in use.

Practical: the control unit and PS324 buffer battery (optional) can be connected by means of a simple connector and can be housed directly inside the motor.

Compatible with Nice SMXI and OXI plug-in receivers (optional).

Nice **BiDirectional products** indicate the status of the automations and confirm correct reception of the command.

Discover the complete range of BiDirectional products on page 176.

Yubii is the new Nice ecosystem that connects all the automations in the home.

Discover all the benefits of the Yubii system on page 170.

KOVOPOLOTOVARY.CZ

COMMON ACCESSORIES

CORE
Nice Wi-Fi-Radio Gateway. Only for TN2010L.

Pc./Pack 1

IBT4N
Interface for connecting the O-View programming unit.

Pc./Pack 1

IT4WIFI
Smart Wi-fi interface to manage gates and garage doors by smartphone (*).

Pc./Pack 1

TNA1
Spare control unit for TN2030L and TNLKCE.

TNA2
Spare control unit, for TN2010L.

PS324
24 V battery with integrated battery charger. Only for TN2010L.

Pc./Pack 1

TNA9
Additional connection cable and supports for wall-mounting of PS324 battery.

Pc./Pack 1

OTA2
Motor support bracket (1250 mm long).

Pc./Pack 1

OTA3
Motor support bracket (2000 mm long).

Pc./Pack 1

OTA9
Motor support bracket (520 mm long).

Pc./Pack 1

TNA5
Pair of standard straight telescopic arms.

Pc./Pack 1

TNA6
Pair of standard curved telescopic arms.

Pc./Pack 1

TNA8
20x20 mm drive shaft (200 mm long).

Pc./Pack 1

TNA4
20x20 mm drive shaft (1500 mm long).

Pc./Pack 1

TNA38
Driving device for transmission shafts.

Pc./Pack 1

OTA11
Kit for unlock from the outside with a metal cord.

Pc./Pack 1

OTA12
Kit for external unlocking with key ratchet (cannot be used with laterally installed motors).

Pc./Pack 1

TS
Signboard.

Pc./Pack 1

SOLEMYO KIT
The solar power to automate gates, garage doors or barrier gates. See page 229.

* Not compatible with the Solemyo kit and PS324

TECHNICAL SPECIFICATIONS

Code	Description	Pack/Pallet
TN2010L	Irreversible, 24 Vdc, with incorporated control unit, courtesy LED light, absolute encoder with BlueBUS technology, compatible for Opera and Solemyo systems	15
TN2030L	Irreversible, 24 Vdc, with incorporated control unit and receiver, courtesy LED light and electromechanical limit switch	15
TN2020L	Irreversible, 24 Vdc, with courtesy LED light, without incorporated control unit	15

Code	TN2010L	TN2010L+TN2020L	TN2030L	TN2030L+TN2020L
ELECTRICAL DATA				
Power supply (Vac 50/60 Hz)	230			
Absorption (A)	1	1,4	1	1,4
Power (W)	240	350	220	330
PERFORMANCE DATA				
Speed (rpm)	1,7		1,4	
Torque (Nm)	350	500	420	700
Work cycle (cycles/hour)	15	25	20	10
DIMENSIONAL AND GENERAL DATA				
Protection level (IP)	44			
Working temp. (°C Min/Max)	-20 ÷ +50			
Dimensions (mm)	150x158x512 h			
Weight (kg)	10	17,2*	9,5	16,7*

* 7.2 for TN2020L

DIMENSIONS

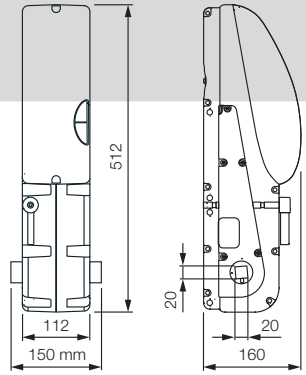

COMPATIBILITY TABLE WITH CONTROL SYSTEMS AND ACCESSORIES

	receiver				transmitter						photocells											flashing light		
Code	Built-in*	OXI	OXIBD	OXILR	ERA INTI	ERA ONE	ERA ONE BD	ERA ONE LR	ERA FLOR	NICEWAY	EPS	EPM	EPL	EPSB	EPMB	EPLB	EPMOW	EPMOR	F210	FT210	F210B	FT210B	ELAC	ELDC	WLT
TN2010L		•	•	•	•	•	•	•	•	•				•	•	•	•				•	•		•	•
TN2030L	•				•	•			•	•	•	•	•				•	•	•	•				•	•

* Radio receiver incompatible with Opera system

KCVO POLOTOVARY.CZ

Nice

OPERA 24V

Tenkit

For projecting and non-projecting up-and-over doors of up to 9 m² and 2.6 m high

Irreversible electromechanical 24 Vdc gear motor.

Functions: standard input for photocells and possibility of connecting phototest function in self-learning mode during installation.

Simplified programming via O-View: thanks to compatibility with the Opera system, the automation system can be managed, programmed and controlled even at a distance, with considerable savings in time.

Convenient: built-in radio card also compatible with Nice Flo and Smilo systems: possibility of memorising up to 100 transmitters. Push-button programming and automatic position search.

Adjustments: 3 force levels, 2 speeds, 3 pause time levels, 3 step-by-step modes.

Maximum safety: provision for connection of latest generation 8.2 KOhm sensitive edges.

Obstacle detection and automatic programming of work times, monitoring of motor absorption throughout travel, self-diagnostics via the flashing light and courtesy LED light.

Acceleration and deceleration at the start and end of each manoeuvre.

The kit contains:

TNLKCE
1 Gearmotor with built-in control unit and receiver, complete with pair of TNA5 telescopic arms and relative TNA38 driving devices.

FLO2RE
1 Transmitter 433.92 MHz, 2 channels.

TS
1 Signboard.

KOVOPOLOTOVARY.CZ

COMMON ACCESSORIES

IBT4N
Interface for connecting the O-View programming unit.

Pc./Pack 1

IT4WIFI
Smart Wi-fi interface to manage gates and garage doors by smartphone.

Pc./Pack 1

TNA1
Spare control unit for TN2030L and TNLKCE.

OTA2
Motor support bracket (1250 mm long).

Pc./Pack 1

OTA3
Motor support bracket (2000 mm long).

Pc./Pack 1

OTA9
Motor support bracket (520 mm long).

Pc./Pack 1

TNA5
Pair of standard straight telescopic arms.

Pc./Pack 1

TNA6
Pair of standard curved telescopic arms.

Pc./Pack 1

TNA8
20x20 mm drive shaft (200 mm long).

Pc./Pack 1

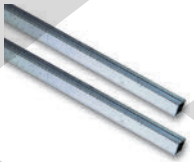

TNA4
20x20 mm drive shaft (1500 mm long).

Pc./Pack 1

TNA38
Driving device for transmission shafts.

Pc./Pack 1

OTA11
Kit for unlock from the outside with a metal cord.

Pc./Pack 1

OTA12
Kit for external unlocking with key ratchet (cannot be used with laterally installed motors).

Pc./Pack 1

TS
Signboard.

Pc./Pack 1

TECHNICAL SPECIFICATIONS

Code	Description	Pack/Pallet
TNLKCE	Irreversible, 24 Vdc, with incorporated control unit and receiver, courtesy LED light and electromechanical limit switch	15

N.B. The content of the package may vary: consult the retailer.

Code	**TNLKCE**
ELECTRICAL DATA	
Power supply (Vac 50/60 Hz)	230
Absorption (A)	0,9
Power (W)	200
PERFORMANCE DATA	
Speed (rpm)	1,7
Torque (Nm)	280
Work cycle (cycles/hour)	20
DIMENSIONAL AND GENERAL DATA	
Protection level (IP)	44
Working temp. (°C Min/Max)	-20 ÷ +55
Dimensions (mm)	150x158x512 h
Weight (kg)	15,5

DIMENSIONS

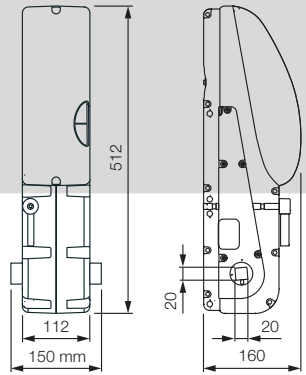

KOVO POLOTOVARY.CZ

Nice

BiDi | Yubii | SOLEMYO | OPERA | BLUEBUS | 24V

Soon

For sectional doors* up to 20 m²

24 Vdc electromechanical gear motor with absolute encoder.

Versatile: ideal in residential contexts with even large garage doors, in multi-user contexts including with intensive use and in industrial contexts with small sectional doors. For example 3x3 m loading points.

All in one: built-in control unit. No track, or rack.

Easy to install: can be fitted directly onto the shaft of a sectional door; compact, particularly in width, in order to make assembly easy in any position.

User-friendly thanks to the BlueBUS system: two-wire connection between the control unit and the pairs of photocells.

Practical: the control unit and PS124 buffer battery (optional) can be connected by means of a simple connector and can be housed directly inside the motor.

Energy saving: the system enters in stand-by when not in use.

Reliable and precise: memorization of limit switch positions on opening and closing; gradual starting and slowdown during closing; the abosolute encoder technology guarantees precision without the need of a limit switch, reliability and long term safeguard of the set values.

Safe: obstacle detection system and monitoring of the motor absorption during movement, self-diagnosis by means of a flashing light, courtesy LED light.

The latest generation optical and resistive 8.2 KOhm sensitive edges can also be connected.

Easy maintenance: removable terminals and receiver.

Easy to certify: passes impact tests without further accessories.

* for balanced sectional doors equipped with anti-crash (safety device useful in case of spring breaking).

Protective flap complete with courtesy LED light. Users can connect and programme the control unit, modify its functions without having to disassemble the casing

Release system with 4 m long cord

Nice **BiDirectional products** indicate the status of the automations and confirm correct reception of the command.

Discover the complete range of BiDirectional products on page 176.

Yubii is the new Nice ecosystem that connects all the automations in the home.

Discover all the benefits of the Yubii system on page 170.

KOVOPOLOTOVARY.CZ

COMMON ACCESSORIES

CORE
Nice Wi-Fi-Radio Gateway.

Pc./Pack 1

IBT4N
Interface for connecting the O-View programming unit.

Pc./Pack 1

IT4WIFI
Smart Wi-fi interface to manage gates and garage doors by smartphone (*).

Pc./Pack 1

SOA2
Spare control unit, for SO2000.

PS124
24 V battery with integrated battery charger.

Pc./Pack 1

CRA9
Adapter for diameter 31.75 (1.1/4"), 35 and 40 mm shafts.

Pc./Pack 1

TS
Signboard.

Pc./Pack 1

SOLEMYO KIT
The solar power to automate gates, garage doors or barrier gates.

See page 229.

* Not compatible with the Solemyo kit and PS124

TECHNICAL SPECIFICATIONS

Code	Description	Pack/Pallet
SO2000	Irreversible, 24 Vdc, with absolute encoder for doors up to 5 m in height	20

Code	SO2000
ELECTRICAL DATA	
Power supply (Vac 50/60 Hz)	230
Absorption (A)	1,6
Power (W)	350
PERFORMANCE DATA	
Speed (rpm)	30
Torque (Nm)	50
Work cycle (cycles/hour)	15
DIMENSIONAL AND GENERAL DATA	
Protection level (IP)	40
Working temp. (°C Min/Max)	-20 ÷ +50
Dimensions (mm)	115x300x375 h
Weight (kg)	10,5

DIMENSIONS

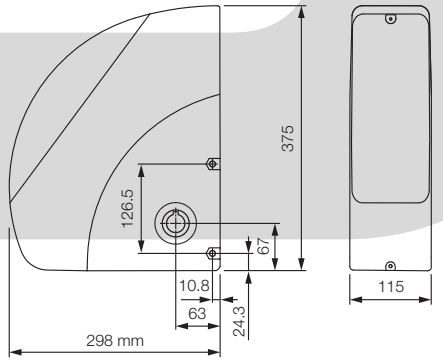

COMPATIBILITY TABLE WITH CONTROL SYSTEMS AND ACCESSORIES

	receiver				transmitter						photocells											flashing light		
Code	Built-in*	OXI	OXIBD	OXILR	ERA INTI	ERA ONE	ERA ONE BD	ERA ONE LR	ERA FLOR	NICEWAY	EPS	EPM	EPL	EPSB	EPMB	EPLB	EPMOW	EPMOR	F210	FT210	F210B	FT210B	ELAC	ELDC	WLT
SO2000		•	•	•	•	•	•	•	•	•				•	•	•	•	•			•	•		•	•

* Radio receiver incompatible with Opera system

KOVOPOLOTOVARY.CZ

Nice

BiDi | Yubii | SOLEMYO | OPERA | 24V

Sumo

For sectional doors and two-wings sliding doors up to 35 m²

24 Vdc electromechanical gear motor with magnetic encoder, no need to adjust limit switches.
Perfect for intensive use.

Compact and versatile: compact, particularly in width, in order to make assembly easy in any position; quick to install.

Easy to install: can be fitted directly onto the shaft of sectional doors. Perfect for Ø 25.4 mm shafts and can be used also with Ø 31.75-35-40 mm shafts thanks to the CRA9 adapter.

Many different functions with the separate D-Pro 924 control unit:

- automatic memorization of limit switches on opening and closing;
- gradual departure and slowdown during closing;
- optional battery power supply in the event of power failure;
- pause time programming and speed adjustment;
- "service" warning light for maintenance (can be programmed according to the number of manoeuvre required).

Nice **BiDirectional products** indicate the status of the automations and confirm correct reception of the command.

Discover the complete range of BiDirectional products on page 176.

Yubii is the new Nice ecosystem that connects all the automations in the home.

Discover all the benefits of the Yubii system on page 170.

Case totally made from thick die-cast aluminium

Release cord, 6.5 m long, with emergency handle

Inspection compartment, easy to access for connections

KOVOPOLOTOVARY.CZ

COMMON ACCESSORIES

DPRO924
Control unit.

Pc./Pack 1

KIO
Key-operated selector switch for low voltage contacts, with release mechanism for metal cord.

Pc./Pack 1

KA1
6 m cable release kit for KIO.

Pc./Pack 1

CRA1
Shaft with 18-tooth pinion Ø shaft 25.4 mm Ø inside crown 25.4 mm.

Pc./Pack 1

CRA2
Joint for chain.

Pc./Pack 1

CRA5
Tensioner drive with brackets, for single or double wing industrial door.

Pc./Pack 1

CRA3
1/2" chain, 1 m pack, plus joint for chain.

Pc./Pack 1

CRA4
1/2" chain, 5 m pack, ideal for single or double wing industrial doors, plus joint for chain.

Pc./Pack 1

CRA8
Wall-fixing bracket.

Pc./Pack 2

CRA9
Adapter for diameter 31.75 (1.1/4"), 35 and 40 mm shafts.

Pc./Pack 1

CRA6

CRA7

CRA6
36-tooth pinion Ø inside 25.4 mm.

Pc./Pack 1

TS
Signboard.

Pc./Pack 1

CRA7
18-tooth pinion Ø inside 25.4 mm.

Pc./Pack 1

SOLEMYO KIT
The solar power to automate gates, garage doors or barrier gates.

See page 229.

TECHNICAL SPECIFICATIONS

Code	Description	Pack/Pallet
SU2000	Irreversible 24 Vdc, with magnetic encoder, no need to adjust limit switches, from 15 m² up to 35 m²	20
SU2000V	Irreversible 24 Vdc, with magnetic encoder, no need to adjust limit switches, increased speed, from 10 m² fino a 25 m²	20
SU2000VV	Irreversible 24 Vdc, with magnetic encoder, no need to adjust limit switches, high speed, from 10 m² up to 15 m²	20
SU2010	Irreversible 24 Vdc, with magnetic encoder, no need to adjust limit switches, IP54, from 15 m² up to 35 m²	20

Code	SU2000	SU2000V	SU2000VV	SU2010
ELECTRICAL DATA				
Power supply (Vdc)	24			
Absorption (A)	13			
Power (W)	500			
PERFORMANCE DATA				
Speed (rpm)	16	23,5	42	16
Torque (Nm)	120	82	46	120
Work cycle (%)	50			
DIMENSIONAL AND GENERAL DATA				
Protection level (IP)	44			54
Working temp. (°C Min/Max)	-20 ÷ +50			
Dimensions (mm)	110x270x350 h			
Weight (kg)	10,5			

DIMENSIONS

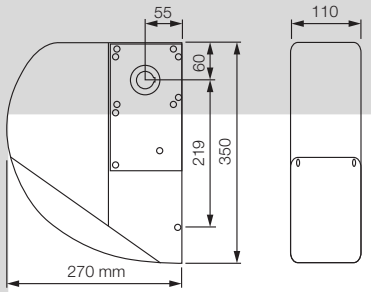

COMPATIBILITY TABLE WITH CONTROL SYSTEMS AND ACCESSORIES

	control unit/receiver							transmitter						photocells											flashing light		
Code	MC200 / Built-in*	MC800 / OXI / OXIBD / OXILR	DPRO500 / OXI / OXIBD / OXILR	DPRO924 / OXI / OXIBD / OXILR	MC424L / Built-in* / OXI / OXIBD / OXILR	MC824H / OXI / OXIBD / OXILR	MC824HR / OXI / OXIBD / OXILR	ERA INTI	ERA ONE	ERA ONE BD	ERA ONE LR	ERA FLOR	NICEWAY	EPS	EPM	EPL	EPSB	EPMB	EPLB	EPMOR	F210	FT210	F210B	FT210B	ELAC	ELDC	WLT
SU2000				•				•	•	•	•	•	•	•	•	•				•	•	•				•	
SU2000V				•				•	•	•	•	•	•	•	•	•				•	•	•				•	
SU2000VV				•				•	•	•	•	•	•	•	•	•				•	•	•				•	
SU2010				•				•	•	•	•	•	•	•	•	•				•	•	•				•	

* Radio receiver incompatible with Opera system

KOVO POLOTOVARY.CZ

Nice

BiDi | Yubii | SOLEMYO | OPERA | BLUEBUS | 230V | 24V

Hyppo 7100

For 2-leaf folding doors

Electromechanical gear motor irreversible with telescopic arm, also in 24 Vdc version, with magnetic encoder.
Single model for right and left leaves.

Double built-in limit switch: in both opening and closing, pre-wired: fewer connections and fast installation (for HY7100 only).

Solid metal mechanics.

Sturdy, galvanised, telescopic arm.

Recommended control units:

- for HY7005 Moonclever MC800;
- for HY7024 Moonclever MC824H.

24 Vdc version with magnetic encoder.

Perfect for intensive use, compatible with the control unit Moonclever MC824H:

- simple programming, by means of a single key;
- automatic memorization of limit switches on opening and closing with self-learning function;
- automatic fault diagnostics;
- programming of pause time;
- pedestrian pass door;
- deceleration on opening and closing;
- obstacle detection with dual technology;
- operation in event of power failure by means of optional rechargeable batteries (PS324);
- provision for connecting latest generation resistive sensitive edges at 8.2 kOhm.

Compact, shockproof bodywork with no sharp corners

Nice aluminium release, designed to accommodate external release

Nice **BiDirectional products** indicate the status of the automations and confirm correct reception of the command.

Discover the complete range of BiDirectional products on page 176.

Yubii is the new Nice ecosystem that connects all the automations in the home.

Discover all the benefits of the Yubii system on page 170.

KOVOPOLOTOVARY.CZ

COMMON ACCESSORIES

CORE
Nice Wi-Fi-Radio Gateway.

Pc./Pack 1

IBT4N
Interface for connecting the O-View programming unit.

Pc./Pack 1

IT4WIFI
Smart Wi-fi interface to manage gates and garage doors by smartphone (*).

Pc./Pack 1

HYA11
Unlock from inside with a 6 m cord.

Pc./Pack 1

KIO
Key-operated selector switch for low voltage contacts, with release mechanism for metal cord.

Pc./Pack 1

KA1
6 m cable release kit for KIO.

Pc./Pack 1

TS
Signboard.

Pc./Pack 1

ACCESSORY FOR 24 V VERSION

PS324
24 V battery with integrated battery charger.

Pc./Pack 1

SOLEMYO KIT
The solar power to automate gates, garage doors or barrier gates.

See page 229.

* Not compatible with the Solemyo kit and PS324

TECHNICAL SPECIFICATIONS

Code	Description	Pack/Pallet
HY7100	Irreversible, 230 Vac, with sturdy telescopic arm, galvanised and painted, with limit switch on opening and closing	16
HY7124	Irreversible, 24 Vdc with magnetic encoder, with telescopic arm, galvanised and painted	16

Code	HY7100	HY7124
ELECTRICAL DATA		
Power supply (Vac 50 Hz)*	230	-
Power supply (Vdc)	-	24
Absorption (A)	1,2	5
Power (W)	250	120
PERFORMANCE DATA		
Speed (rpm)	1,7	2
Torque (Nm)	400	250
Work cycle (%)	30	80
DIMENSIONAL AND GENERAL DATA		
Protection level (IP)	20	
Working temp. (°C Min/Max)	-20 ÷ +50	
Dimensions (mm)	350x165x242 h	
Weight (kg)	13	

UTILISATION LIMITS

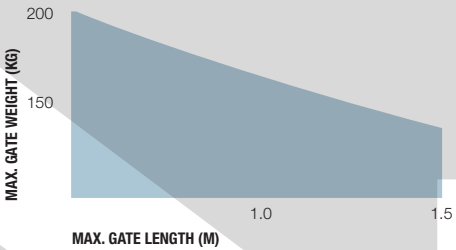

The above values are valid if the motor is used with standard accessories.

DIMENSIONS

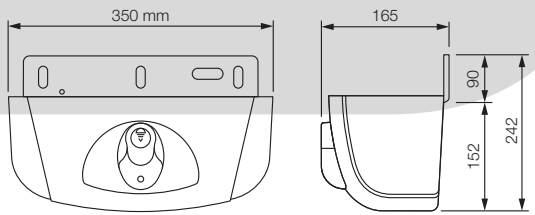

COMPATIBILITY TABLE WITH CONTROL SYSTEMS AND ACCESSORIES

	control unit/receiver							transmitter						photocells										flashing light		
Code	MC200 / Built-in*	MC800 / OXI / OXIBD / OXILR	DPR0500 / OXI / OXIBD / OXILR	DPR0924 / OXI / OXIBD / OXILR	MC424L / Built-in* / OXI / OXIBD / OXILR	MC824H / OXI / OXIBD / OXILR	MC824HR / OXI / OXIBD / OXILR	ERA INTI	ERA ONE	ERA ONE BD	ERA ONE LR	ERA FLOR	NICEWAY	EPS	EPM	EPL	EPSB	EPMB	EPLB	EPMOW	F210	FT210	F210B	FT210B	ELAC	ELDC	WLT
HY7100		•						•	•	•	•	•	•	•	•	•				•	•	•			•		
HY7124						•		•	•	•	•	•	•				•	•	•	•			•			•	•

* Radio receiver incompatible with Opera system

KOVO POLOMOVARY.CZ

Nice for balanced rolling doors

KOVOPOLOTOVARY.CZ

Selection guide

230 Vac,
with electromechanical
limit switch.
Giro
pages 164/165

- reversible, without brake
  - for balanced rolling doors up to 170 kg → **GR170R**
  - for balanced rolling doors up to 170 kg and long power cable included → **GR170RE01**
- irreversible, with brake and release device
  - for balanced rolling doors up to 170 kg → **GR170**
  - for balanced rolling doors up to 170 kg and long power cable included → **GR170E01**
  - Twin-motor — for balanced rolling doors up to 340 kg and long power cable included → **GR340E01**

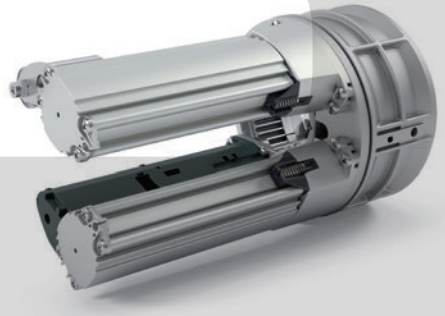

230 Vac,
with electromechanical
limit switch.
Rondo
pages 166/167

- irreversible, with brake and release device
  - for balanced rolling doors up to 170 kg → **RN2040**

KOVOPOLOTOVARY.CZ

Nice

OPERA 230V

Giro

For balanced rolling shutters up to 170 kg and 340 kg

Electromechanical gearmotor available both in reversible and irreversible version.

High performance: new irreversible twin-motor version with 800 W power and lifting force up to 340 Nm.

Unbeatably flexible use and less inventory to keep in stock: a single model that is designed to take a 76 mm rolling shutter shaft but can be easily adapted to take a 60 or 48 mm shaft, covering the full range of most commonly used sizes.

The outside diameter of the gear can be adapted from 200 mm to 220 or 240 mm, allowing installation on most rolling shutters.

Technologically innovative: the brake is built into the gearmotor and results in much smoother operation than the traditional solution.

Easy limit switch adjustment: automatic limit switch adjustment is achieved by simply operating the rolling shutter without any load, with the motor released, and then just fine-tuning the system manually.

Simple system for releasing both motors at the same time.

Recommended control unit: MC200.

QUICK AND EASY INSTALLATION

During installation, the motor is supported on the shaft thanks to the practical guided coupling.

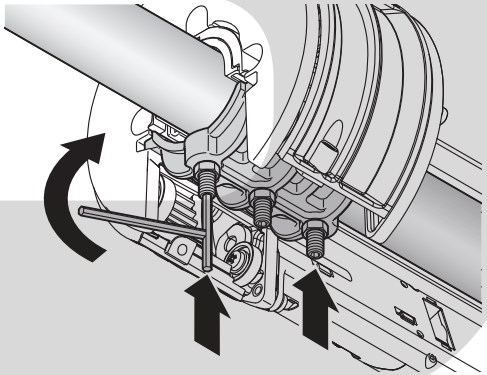

Practical:
limit switches for both closing and opening, easy to adjust

Versatile:
can be used with 76, 60 and 48 mm shafts

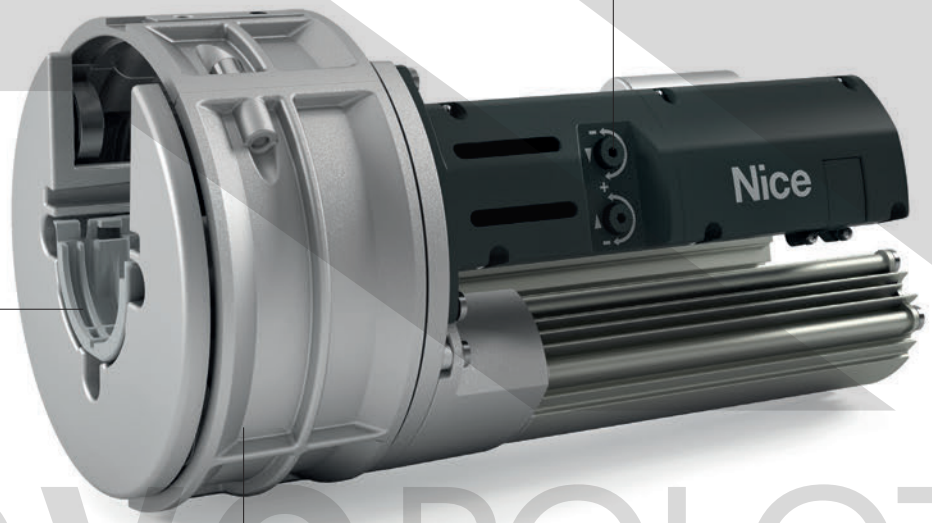

Strong:
100% aluminium housing

Twin-motor version:
maximum power, ideal for the toughest applications

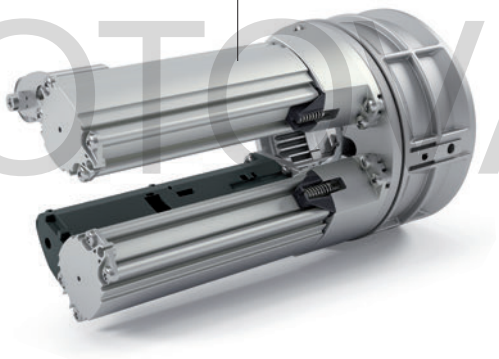

KOVO POLOTOVARY.CZ

COMMON ACCESSORIES

IBT4N
Interface for connecting the O-View programming unit.

Pc./Pack 1

IT4WIFI
Smart Wi-fi interface to manage gates and garage doors by smartphone.

Pc./Pack 1

MC200
Control unit with automatic closing.

Pc./Pack 1

GRA02
Adapter for 48 mm shaft.

Pc./Pack 1

GRA03
Adapter for 240 mm gear diameter.

Pc./Pack 1

GRA01
Additional motor for GR170, complete with accessories for simultaneous release.

Pc./Pack 1

KIOMINI
Aluminium key switch/switch lock box with control and release button.

Pc./Pack 1

KIO
Key-operated selector switch for low voltage contacts, with release mechanism for metal cord.

Pc./Pack 1

TS
Signboard.

Pc./Pack 1

TECHNICAL SPECIFICATIONS

Code	Description	Pack/Pallet
GR170	For balanced rolling doors up to 170 kg, 230 V irreversible, with built-in brake and release device	44
GR170E01	For balanced rolling doors up to 170 kg, 230 V irreversible, with built-in brake and release device, power cable, 5 m long, included in box	44
GR170R	For balanced rolling doors up to 170 kg, reversible 230 V, without brake	44
GR170RE01	For balanced rolling doors up to 170 kg, reversible 230 V, without brake, 5 m long power cable included	44
GR340E01	For balanced rolling doors up to 340 kg, irreversible 230 V, twin-motor with built-in brake and release device, 5 m long power cable included	44

Code	GR170/E01 - GR170R/E01	GR340E01
ELECTRICAL DATA		
Power supply (V/Hz)	230/50	
Absorption (A)	1,9	3,3
Power (W)	430	800
PERFORMANCE DATA		
Speed (rpm)	8	
Torque (Nm)	170	340
Continuous operating time (min)	4	
Max. number of operations per day	10	
DIMENSIONAL AND GENERAL DATA		
Rolling shutter shaft diameter	76 - 60* - 48**	
Outside diameter of the gear	200 - 220* - 240**	
Protection level (IP)	20	
Working temp. (°C Min/Max)	-20 ÷ +50	
Dimensions (mm)	200 x 380	
Weight (kg)	7	10,5

* with adapter included in box
** with additional adapter (optional extra)

DIMENSIONS

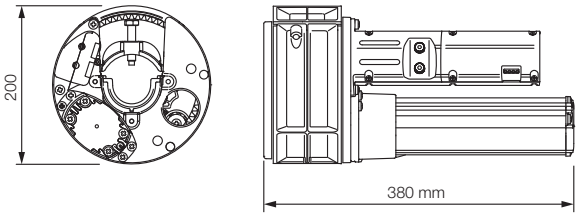

COMPATIBILITY TABLE WITH CONTROL SYSTEMS AND ACCESSORIES

	control unit/receiver							transmitter									photocells								flashing light		
Code	MC200 / Built-in*	MC800 / OXI / OXIBD / OXILR	DPRO500 / OXI / OXIBD / OXILR	DPRO924 / OXI / OXIBD / OXILR	MC424L / Built-in* / OXI / OXIBD / OXILR	MC824H / OXI / OXIBD / OXILR	MC824HR / OXI / OXIBD / OXILR	ERA INTI	ERA ONE	ERA ONE BD	ERA ONE LR	ERA FLOR	NICEWAY	EPS	EPM	EPL	EPSB	EPMB	EPLB	EPMOR	F210	FT210	F210B	FT210B	ELAC	ELDC	WLT
GR170 / GR170E01	•							•	•			•	•	•	•	•				•	•	•			•		
GR170R / GR170RE01	•							•	•			•	•	•	•	•				•	•	•			•		
GR340E01	•							•	•			•	•	•	•	•				•	•	•			•		

* Radio receiver incompatible with Opera system

KOVOPOLOWARY.CZ

Nice

OPERA 230V

Rondo

For balanced rolling doors up to 170 kg

Irreversible electromechanical gearmotor.

Smart: the wiring is protected by an elegant box; pre-wired capacitor.

Fast: easy and intuitive adjustment of the limit switches both during opening and closing.

Complete: supplied with 200 mm pinion and 220 mm adaptor, for 60 mm shafts with 48 mm adaptors.

Easy to install: thanks to the guided connector, you don't need to hold the motor while you secure it using just 3 screws.

Recommended control unit MC200, easy, complete and reliable with:

- compatible with the Opera system;
- remote control with the MyNice Welcome App (thanks to the IT4WIFI interface);
- semi-automatic or automatic operation;
- complete reverse run with photocell;
- step-by-step operation;
- programmable Step-by-step/Open input;
- programmable Stop/Photo input;
- input for resistive edge;
- incorporated radio card, compatible with the Nice Flo, FloR and Smilo systems.

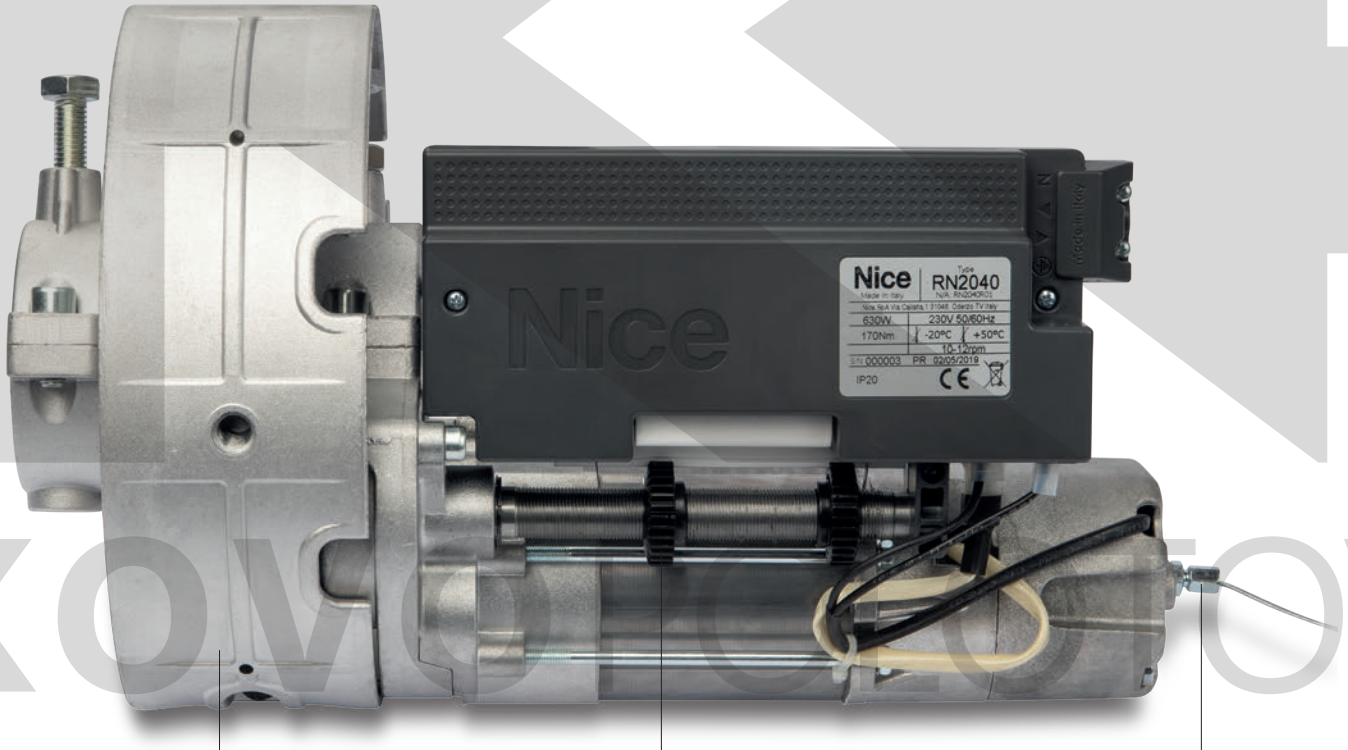

Sturdy: housing in 100% aluminium

Practical: easy to adjust, electromechanical limit switches both during closing and opening

Complete: designed for cord operated release

KOVOPLASTOVARY.CZ

COMMON ACCESSORIES

IBT4N
Interface for connecting the O-View programming unit.

Pc./Pack 1

IT4WIFI
Smart Wi-fi interface to manage gates and garage doors by smartphone.

Pc./Pack 1

MC200
Control unit with automatic closing.

Pc./Pack 1

KIO
Key-operated selector switch for low voltage contacts, with release mechanism for metal cord.

Pc./Pack 1

KIOMINI
Aluminium key switch/switch lock box with control and release button.

Pc./Pack 1

TS
Signboard.

Pc./Pack 1

TECHNICAL SPECIFICATIONS

Code	Description	Pack/Pallet
RN2040	For balanced rolling doors up to 170 kg, irreversible, with brake and release device	40

Code	**RN2040**
ELECTRICAL DATA	
Power supply (Vac 50 Hz)*	230
Absorption (A)	2,7
Power (W)	630
PERFORMANCE DATA	
Speed (rpm)	10
Torque (Nm)	170
Continuous operating time (min)	4
DIMENSIONAL AND GENERAL DATA	
Protection level (IP)	20
Working temp. (°C Min/Max)	-20 ÷ +50
Dimensions (mm)	200x350
Weight (kg)	8

* 120 Vac version available on request.

DIMENSIONS

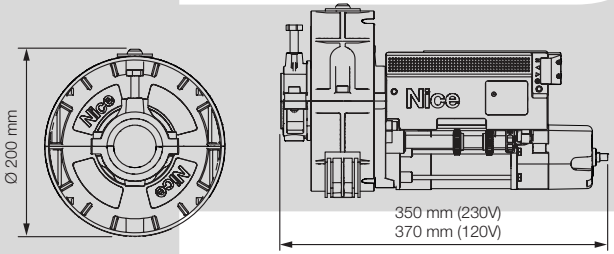

COMPATIBILITY TABLE WITH CONTROL SYSTEMS AND ACCESSORIES

	control unit/receiver							transmitter					photocells										flashing light		
Code	MC200 / Built-in*	MC800 / OXI / OXIBD / OXILR	DPRO500 / OXI / OXIBD / OXILR	DPRO924 / OXI / OXIBD / OXILR	MC424L / Built-in* / OXI /OXIBD / OXILR	MC824H / OXI / OXIBD / OXILR	MC824HR / OXI / OXIBD / OXILR	ERA INTI	ERA ONE	ERA ONE BD	ERA ONE LR	ERA FLOR	NICEWAY	EPS	EPM	EPL	EPSB	EPMB	EPLB	EPMOR	F210	FT210	F210B	FT210B	ELAC	ELDC	WLT
RN2040	•							•	•			•	•	•	•	•				•	•	•			•		

* Radio receiver incompatible with Opera system

KOVOPOLOTOVARY.CZ

Nice
Your Era One long range
15%
Your Era One long range controls:
button #1
button #2
Nice
Nice

Control systems

Yubii ecosystem

170.

Smartphone control systems

172. Core and App MyNice Welcome
174. IT4WIFI and App

Radio control systems

176. Era One BD, OXI BD
177. Era One LR, OXI LR
178. Era P View
180. Era Inti
182. Era One
183. Era Flor
184. NiceWay
188. Receivers

Programming interface, control and management

190. Pro-View and App My Nice Pro

Opera system

192. O-View, O-Box, OX4T

TAG system

198. TTX4, TTXB4, TT2N, TT2Z, TT2L, TT2D, TTDMS, TT1N, TT1V, TT1L

Access control management system

206. Nice Pass

KOVO POLOTOVARY.CZ

Yubii™

More automations, more control, fewer worries.

Yubii connects all the automations in your home and lets them communicate with each other and with you via the Mesh network, so you can eliminate every doubt and live each day with greater peace of mind.

Manage your home from your smartphone.

Download the MyNice Welcome app to have everything under control, even when you're not at home.

More certainty with bidirectional remote controls.

Bidirectional remote controls provide feedback through vibration, sounds and lights to indicate automation status and correct command reception.

Your lifestyle, your scenarios.

Connect your automations through the Core and create customised scenarios you can manage either by smartphone or by setting a key on your bidirectional remote control.

For example, you could create a scenario that raises the rolling shutters, turns on the irrigation and opens the garage door to let the dog out in the garden every morning at 7.00. All this with just one click on your smartphone or the bidirectional remote control.

KOVOPOLOTOVARY.CZ

Do you want to have everything under control, even when you're not at home? You can even get an answer from your present gate or garage with a simple upgrade. Do the test now and discover which bidirectional products you need on
yubii.niceforyou.com

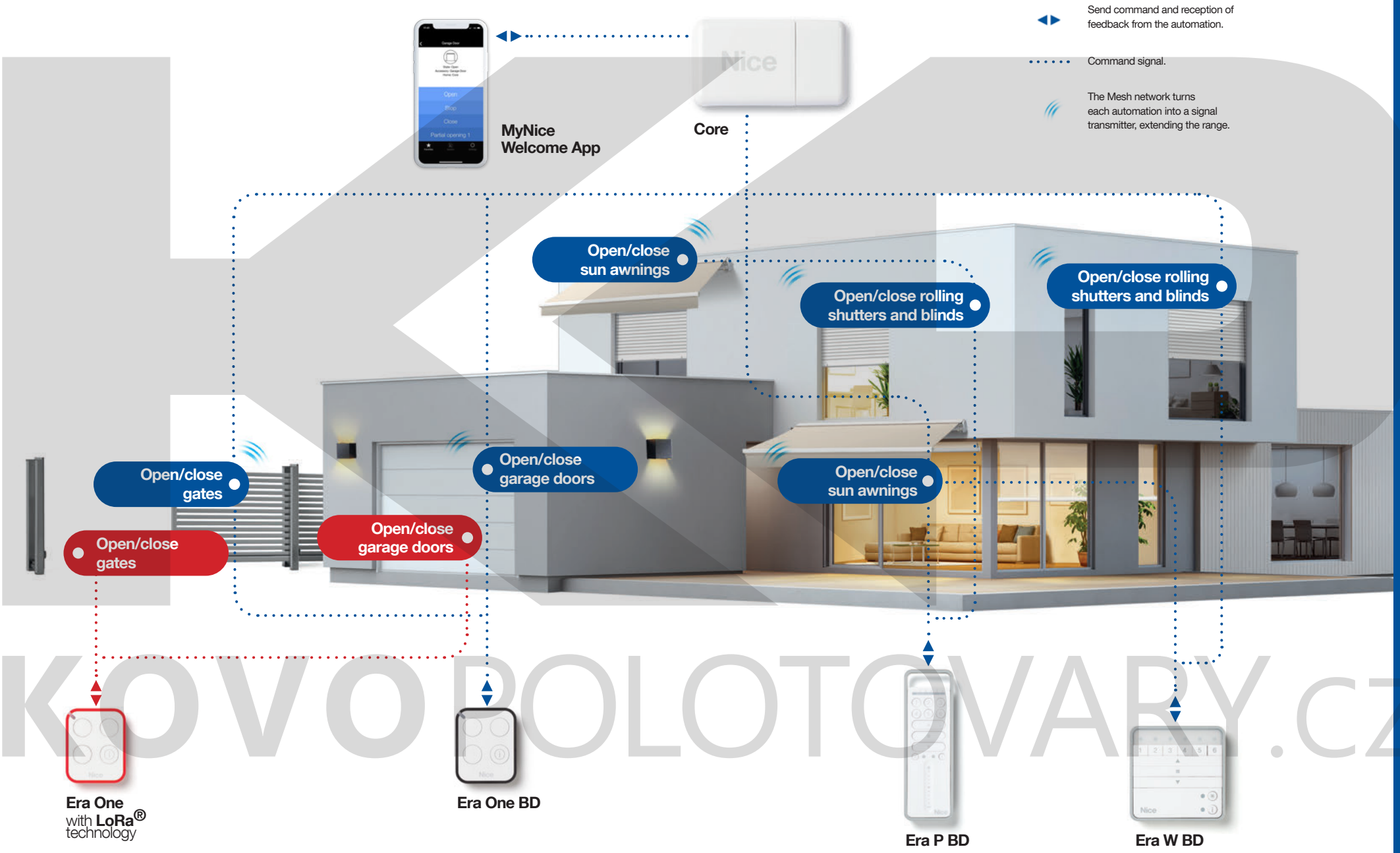

KOVO POLOTOVARY.CZ

Nice

NEW BiDi Yubii

Core

Nice Wi-Fi-Radio Gateway

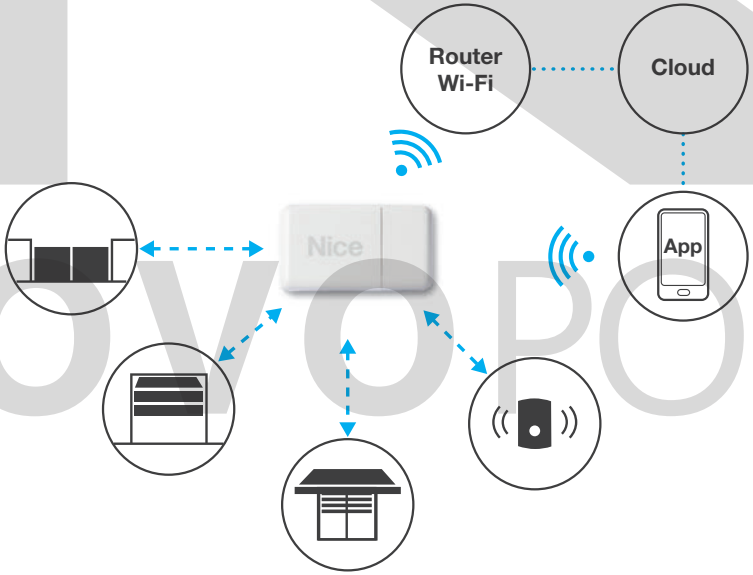

Nice Wi-Fi-Radio Gateway to manage Nice automations via the MyNice Welcome App.

Smart: communicating by Wi-Fi, Core enables Nice automations with built-in or optional radio receiver for doors, gates, barriers, blinds, awnings and rolling shutters to be connected, made to interact and controlled, including remotely. It can also be used to manage remote controls (including unidirectional), sensors for blinds, awnings and rolling shutters with built-in radio and accessories for MyNice alarm systems (except MNTX8, MNKS, and MNPIRTVCC series Photopirs).

Easy to configure: the **MyNice Welcome App** makes configuring the interactions between the automations and programming scenarios easy and intuitive.

Comfort: activations can be scheduled in time bands, for example:

- at 7.00 in the morning, raise the blinds and open the garage door (good morning);
- at 21.00 in the evening, dim the light levels in the room by partially lowering the blinds, turn power to the stereo on to play music (relax);
- at 22.00 at night, turn off the lights (good night).

Safe: The bidirectional radio protocol uses GFSK modulation to improve immunity from interference.

Optional battery power to safeguard functions in the event of blackout. Configurations are automatically saved on the Nice Cloud.

Versatile: Thanks to the Yubii ecosystem, you can make all the devices in the system interact to create events, such as:

- activating a Nice remote control raises the blinds and turns the lights off;
- if a Nice smoke detector detects the beginning of a fire, the system will automatically turn power to the electrical loads off;
- if a Nice flood detector detects that the water has reached the threshold level, it will open the garage door.

In unidirectional rolling code mode, compatible with previous versions of Nice receivers with connector or surface mounted.

Discover the complete range of **BiDirectional products** on page 176.

Discover all the benefits of the **Yubii** system on page 170.

TECHNICAL SPECIFICATIONS

Code	Description
CORE	Nice Wi-Fi-Radio Gateway

Code	**CORE**
Input	5V
Optional battery power	2x AA NiMh rechargeable
Maximum absorbed power (mW)	1,5
Wi-Fi interface with internal antenna	802.11b/g/n – 2,4 GHz (P<10mW)
Safety	OPEN/WEP/WPA-PSK/WPA2-PS
Support	WPS
Dual band radio transmission	Dual band bidirectional 433.54 - 433.92 MHz 868,3 - 868,94 MHz (P<10mW)
Radio range in open space free of disturbance *	500 m (max. Mesh network); 150m (if inside buildings)*
Protection level (IP)	30
Operating temperature(°C Min/Max)	-20 ÷ +50
Dimensions (mm)	113x64x33
Weight (g)	100

* Transmitter range and receiver reception capacity may be affected by any devices operating on the same frequency in the area and by the position of the system's radio antenna.

KOVOPOLOTOVARY.CZ

NEW BiDi Yubii

My Nice Welcome App

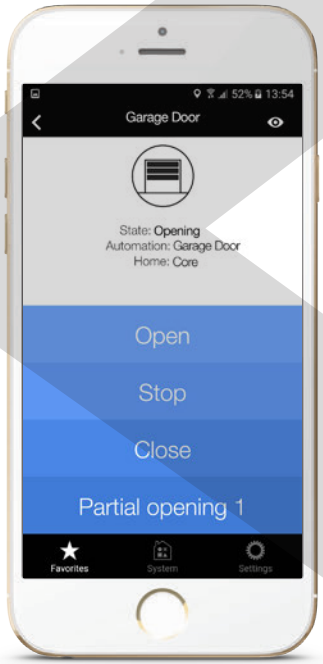

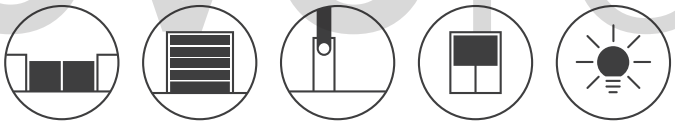

MyNice Welcome is a single APP allowing users to configure and control **Nice** devices directly from their smartphone via **Core**, the Nice Wi-Fi-Radio gateway.

Everything under control: if your smartphone has an internet connection, you can also view the status of each individual automation and control it wherever you are via the Nice Cloud.

All Nice technology at your fingertips!: the MyNice Welcome App lets you configure and control the system locally, even without an internet connection.

With a simple click, you can update the IT4WIFI interface and Nice Core Wi-Fi-radio gateway, download the events log and view automation activations and diagnostics.

Practical: you can control Nice group automations and create scenarios and rules remotely, combining sensors, remote controls and automations (the smartphone and Core communicate via the Wi-Fi network).

Smart: with the dedicated accessories, you can now:

- **associate** and save all home devices, such as sensors, remote controls and automations;
- **configure** the parameters of the bidirectional sensors and verify their status (battery, FW version, etc.);
- **add** more functions to a key on the remote control, while maintaining the original settings (for example, if pressing a key opens the gate, you can now add other functions, such as the simultaneous or delayed switching of the garage light or activation of an existing scenario);
- **create** scenarios involving all the saved devices, or activate the functions of an automation with an event (pressing a button, sensor activation, scheduling), for example, close the rolling shutters at your preferred time of day (scheduling) or when the wind sensor sends an event (sensor activation).

Discover the complete range of **BiDirectional products** on page 176.

Discover all the benefits of the **Yubii** system on page 170.

MyNice Welcome

Available free on

Download on the App Store

GET IT ON Google Play

Functions
Commands: open, stop, close, plus one other from among those provided by the automation
Geolocation and other actions are possible thanks to compatibility with the IFTTT service

Requisites
A maximum of 20 users can be associated with the IT4WIFI
iOS 10 or Android 5 operating system or later
Wi-Fi access point supporting Apple's Bonjour service

To configure Core with the MyNice Welcome App, see the instructions on the Nice site.
https://www.niceforyou.com/en/support

KOVOPOLOTOVARY.CZ

Nice

IT4WIFI

Interface for controlling Nice automations by smartphone

Works with Apple HomeKit

IFTTT

Wi-Fi interface allowing control of Nice gate and garage door automations compatible with the BusT4 (Opera) protocol.

Easy to install:

1 Using the cable provided, connect the BusT4 socket on the Wi-Fi interface and the BusT4 or IBT4N* socket on the Nice control unit.

2 Choose whether to use IT4WIFI with the MyNice or Apple HomeKit protocol. Then configure the interface using your smartphone.

The IT4WIFI interface can be installed in the control unit or a protected environment. To reach the Wi-Fi range, a BusT4 cable up to 100 m long can be used.

Geolocation: with the GPS on the smartphone activated, the gate or garage door opens or closes when the device is at the set distance.

Voice commands: Open and close the garage door with Siri: the automation can be activated with just a voice command.

Programmed actions: certain actions can be programmed to take place at set times and days. For example: "From Monday to Friday, open the gate and garage door at 19.00".

Integration with the Apple HomeKit.
Nice has Apple HomeKit certification with the IT4WIFI interface: manage Nice automations with Apple's Home app and create personalised scenes with the other HomeKit devices connected.

Compatibility with the IFTTT service: by using the free IFTT (If This Then That) web platform, simple cause-effect rules can be created, associating the services provided by the various applications.
For more information, visit the website www.ifttt.com/nice.

TECHNICAL SPECIFICATIONS

Code	Description
IT4WIFI	Kit containing: 1 Wi-Fi interface, 1 RJ-11 phone cable, 1 IBT4N adapter

Code	IT4WIFI
Voltage (V)	24
Current (mA)	30
Maximum absorbed power (mW)	700
Wi-Fi interface	type 802.11b/g/n - 2.4 GHz
Power	14dBm at connector
Safety	OPEN/WEP/WPA-PSK/WPA2-PSK
Aerial connector	SMA
Protection level (IP)	30
Operating temperature	minimum -20°C, maximum +50°C
Dimensions (mm)	58x63x24 (excluding SMA and aerial)
Weight (g)	60

KOVOPOLOTOVARY.CZ

TABLE OF COMPATIBILITY WITH AUTOMATION SYSTEMS AND NICE CONTROL UNITS

Hi-Speed systems									For swing gates										For sliding gates						Barrier gate operator systems				For garage doors									Control units					
TOONA HS	WINGO HS	TITAN HS	HYKE HS	M-FAB HS	L-FAB HS	ROBUS HS	RUN HS	SPY HS	TOONA	WINGO	OLTRE	WALKY	HOPP	HYKE	HYPPO	S-FAB	M-FAB	L-FAB	BIG-FAB	NAKED SLIDING	SLIGHT	ROBUS	ROAD	RUN	TUB	S-BAR	M-BAR	L-BAR	WIDE	SPY	SPINBUS	SPINBUSKIT 20/22/23	SPINKIT	TEN	TENKIT	SOON	SUMO	HYPPO	MC824H	MC424L	MC200	DPRO500	MC800	DPRO924
•	•	•	•	•	•	•	•	•	•	•	•	•	•	•	•	•	•	•	•	•	•	•	•	•	•	•	•		•	•	•	•	•	•	•		•	•	•	•	•	•

* IBT4N is an adaptor for connecting the BusT4 cable to Nice control units without RJ-11 input.

A complete offer

Home by Apple

Controlling the garage door by iPhone and Apple Watch using the Apple HomeKit protocol. Creation of scenes with the other HomeKit accessories.

Works with Apple HomeKit

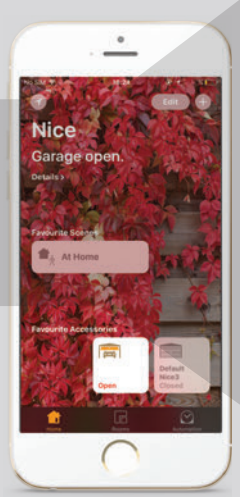

Functions
Commands: open, close
Voice commands by Siri
Geolocation

Requisites
A maximum of 16 users can be associated with the IT4WIFI
iOS 10 operating system or later
Wi-Fi access point supporting Apple's Bonjour service
Domestic hub: 4th generation Apple TV with tvOS 10 or later versions

To configure IT4WIFI with the Home app, see **the instructions on the Apple site.**

https://support.apple.com/en-gb/HT204893

MyNice Welcome HK

Controlling the garage door by iPhone and Apple Watch using the Apple HomeKit protocol.

Download on the App Store · Works with Apple HomeKit

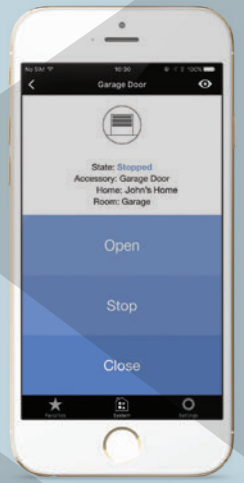

Functions
Commands: open, stop, close
Voice commands by Siri
Geolocation

Requisites
A maximum of 16 users can be associated with the IT4WIFI
iOS 10 operating system or later
Wi-Fi access point supporting Apple's Bonjour service
Domestic hub: 4th generation Apple TV with tvOS 10 or later versions

To configure IT4WIFI with the MyNice Welcome HK app, see the **instructions on the Nice site.**

https://www.niceforyou.com/en/support

MyNice Welcome

Controlling the gate and garage door by smartphone, for iOS and Android users.

Download on the App Store · GET IT ON Google Play

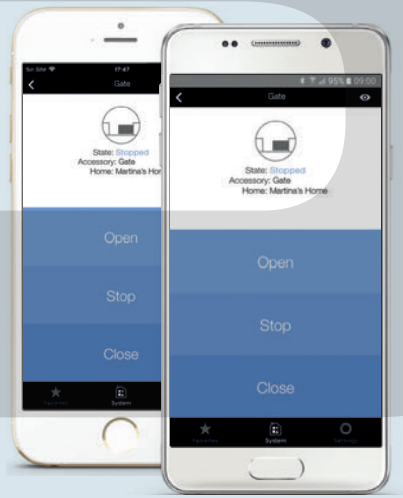

Functions
Commands: open, stop, close, plus one other from among those provided by the automation
Geolocation and other actions are possible thanks to compatibility with the IFTTT service

Requisites
A maximum of 20 users can be associated with the IT4WIFI
iOS 10 or Android 5 operating system or later
Wi-Fi access point supporting Apple's Bonjour service

To configure IT4WIFI with the MyNice Welcome app, see the **instructions on the Nice site.**

https://www.niceforyou.com/en/support

Application of the Works with Apple HomeKit logo indicates that the electronic accessory in question has been designed specifically to connect with the iPod touch, iPhone or iPad respectively and that the developer certifies its compliance with the performance standards defined by Apple. Apple is not liable for functioning of the device or its compliance with legal and safety standards.

KOVOPOLOTOVARY.CZ

Nice

NEW BiDi Yubii

Era One BD & OXI BD

Bidirectional transmitters and receivers

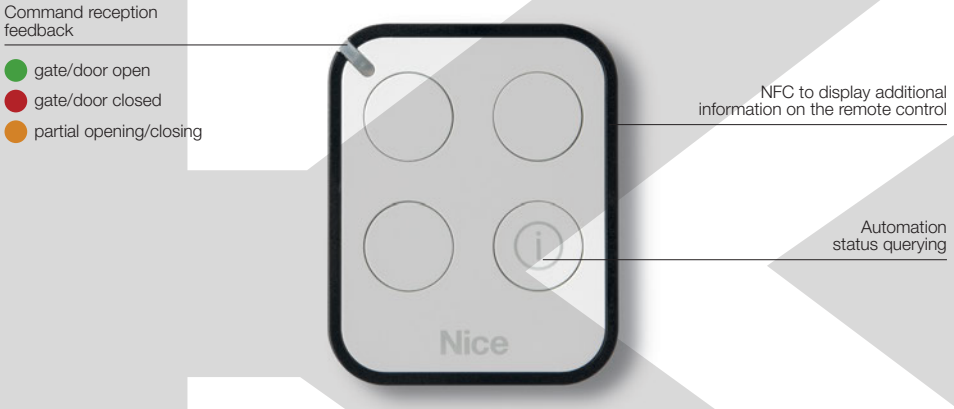

4 key transmitter: 3 radio channels and 1 key to request automation status.

433.92 MHz radio frequency with rolling code encoding, identity code management and self-learning with 192 bit encoding, also compatible with receivers with Nice O-Code FloR encoding. Operating in unidirectional mode, the bidirectional Era One remote control is also compatible with previous versions of Nice receivers with connector or surface mounted.

Instantaneous commands: the new bidirectional radio protocol is about 30 times faster than the previous radio protocols. Automation control has never been faster!

Even at a distance from the system, you can enable a new transmitter by using another Era One transmitter already enabled in the receiver, thanks to exchange of the **identity code** between them.

Elegant and convenient: the Era One transmitter can be used as a stylish, high-tech keyring or fixed to the wall or your car's dashboard with the handy support included in the pack.

Era One bidirectional, ideal for use in cities or places where many devices are present. The bidirectional radio protocol uses GFSK modulation to improve immunity from interference.

Receiver with connector, bidirectional, with the functions of the Opera system.

The OXIBD is compatible with all Nice control units with SM connector and so can also make existing Nice automations bidirectional.

Ergonomic design: antenna connectors, programming LED and key in convenient, handy positions.

Maximum flexibility: can memorise up to 750 bidirectional transmitters or 1024 unidirectional transmitters.

OXIBD receivers can be used as signal repeaters to increase the operating distance between the transmitters and other Nice bidirectional receivers.

TRANSMITTER TECHNICAL SPECIFICATIONS

Code	Description	Pc/Pack
ON3EBD	3 channels, bidirectional, 433.92 MHz	10

	Carrier frequency	Estimated range	Encoding	Power supply	Battery life	Ingress protection class	Dimensions Weight
ON3EBD	433.92 MHz	500 m (max. Mesh network); 35 m (if inside buildings)*	BD; O-Code 192 bit	3 Vdc; lithium battery type CR2032	2 years (with 10 transmissions per day)	IP40 (use in protected environments)	45x56x11 h mm 18 g

* Transmitter range and receiver reception capacity may be affected by any devices operating on the same frequency in the area and by the position of the system's radio antenna.

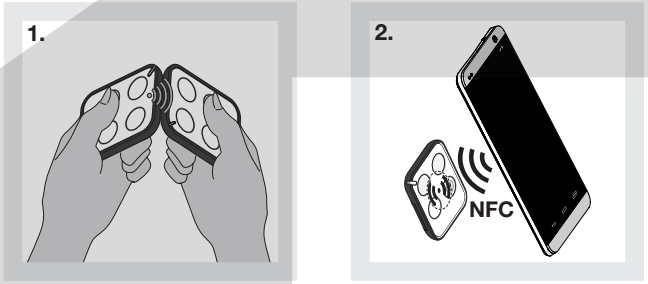

1. Code exchange between a memorized transmitter and a new one, to be memorized.

2. The NFC technology and a dedicated web page enable further information to be provided on the transmitter and battery status.

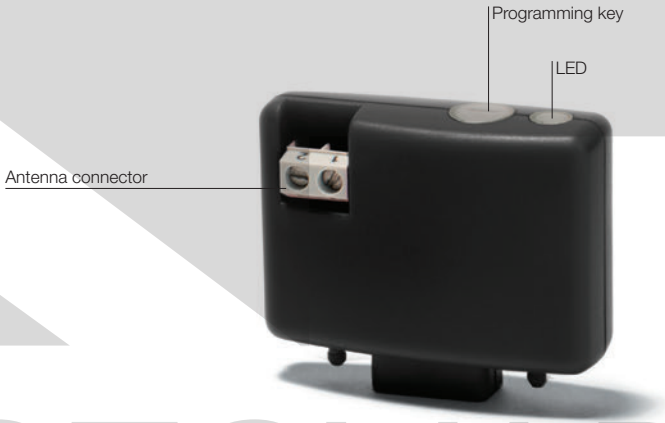

RECEIVER TECHNICAL SPECIFICATIONS

Code	Description	Pc/Pack
OXIBD	Radio receiver with connector, bidirectional, 433.92 MHz	1

	Reception frequency	Transmission frequency	Input impedance	Sensitivity	Encoding	Number of channels	Power supply	Absorption	Ingress protection class	Dimensions Weight
OXIBD	433.92 MHz	433.92 MHz (BD only)	50 Ohm	-108 dBm	BD, O-Code, FloR, TTS, Flo, Smilo	4 (on "SM" plug-in connector)	5 Vdc	50 mA (max)	IP 30	49.5x18x41.9 h mm 22 g

KOVOPOTOVARY.CZ

Nice

NEW BiDi

Era One LR & OXI LR

Bidirectional transmitters and receivers with LoRa® long range technology

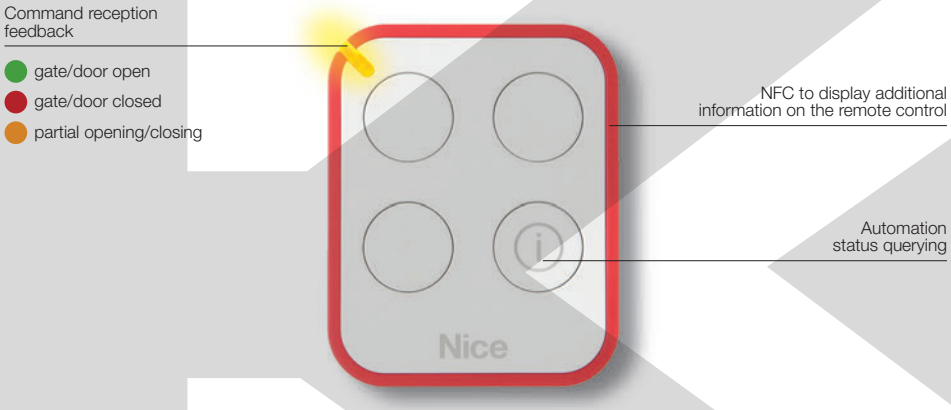

4 key transmitter: 3 radio channels and 1 key to request automation status.

433.92 MHz radio frequency with rolling code encoding, identity code management and self-learning.

Long range commands: LoRa® technology sends commands over a distance about 10 times greater than previous radio protocols. Automation control has never been so efficient!

Even at a distance from the system, you can enable a new transmitter by using another Era One LR transmitter already enabled in the receiver, thanks to exchange of the **identity code** between them.

Elegant and convenient: the Era One LR transmitter can be used as a stylish, high-tech keyring or fixed to the wall or your car's dashboard with the handy support included in the pack.

Era One LR bidirectional, ideal for use in cities or places where many devices are present. The bidirectional radio protocol uses LoRa® modulation to improve immunity from interference.

Radio receiver with connector, bidirectional, with LoRa® technology.

The OXILR is compatible with all Nice control units with SM connector and so can also make existing Nice automations long range and bidirectional.

Ergonomic design: antenna connectors, programming LED and key in convenient, handy positions.

Maximum flexibility: they can memorise up to 1,024 bidirectional transmitters with LoRa® technology.

TECHNICAL SPECIFICATIONS

Code	Description	Pc/Pack
ON3ELR	3 channels, 433.92 MHz, bidirectional, with LoRa® technology	10
ONELRKIT	KIT with LoRa® technology Contains: 2 x ON3ELR, 1 x OXILR, 1 x OX2UBP	1

	Carrier frequency	Estimated range	Encoding	Power supply	Battery life	Ingress protection class	Dimensions Weight
ON3ELR	433.92 MHz	1 Km; 100 m (if inside buildings)*	LR	3 Vdc; lithium battery type CR2032	2 years (with 10 transmissions per day)	IP40 (use in protected environments)	45x56x11 h mm 18 g

* Transmitter range and receiver reception capacity may be affected by any devices operating on the same frequency in the area and by the position of the system's radio antenna.

ONELRKIT Kit with LoRa® technology for installation in third party automations, thanks to the OX2UBP hardware interface.

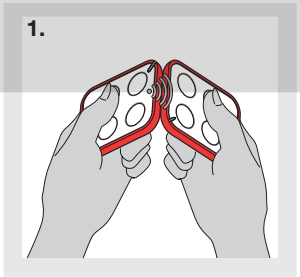

1. Code exchange between a memorized transmitter and a new one, to be memorized.

2. The NFC technology and a dedicated web page enable further information to be provided on the transmitter and battery status.

RECEIVER TECHNICAL SPECIFICATIONS

Code	Description	Pc/Pack
OXILR	Radio receiver with connector, 433.92 MHz, bidirectional, with LoRa® technology	1

	Reception frequency	Transmission frequency	Input impedance	Sensitivity	Encoding	Number of channels	Power supply	Absorption	Ingress protection class	Dimensions Weight
OXILR	433.92 MHz	433.92 MHz	50 Ohm	-118 dBm	LR	4 (on "SM" plug-in connector)	5 Vdc	50 mA (max)	IP 30	49.5x18x41.9 h mm 22 g

KOVO-SOLOTOVARY.CZ

Nice

Era P View

Multifunction radio transmitter

Multifunction radio transmitter with intuitive graphic interface, LCD colour screen (2.2”) navigation by 5-key joypad.

To manage up to 99 devices singularly or in groups (20 zones, groups or scenarios).

With clock and calendar to configure timed commands.

Advanced programming for professionals! The installer can access the transmitter and receiver programming and modify and create types and sets of commands.

Direct access from first start-up by inserting the batteries or subsequently using the keys on the back of the transmitter.

Easy to use for all requirements: can be used in either simple or advanced mode.

Advanced Users: Can modify the transmitter settings and the labels identifying the devices and create, time, modify and control zones, groups and scenarios. They can also limit access to the advanced menu by a numerical password.

Easy Users: Can simply and directly control a small number of devices pre-authorised by the advanced user.

They can consult the dashboard and suspend timed events.

Practical and functional: If not used for a few seconds, Era P View switches to stand-by to reduce battery consumption. Thanks to the built-in sensors, the device comes on again automatically when removed from the wall support or moved, or if any key is pressed.

USB socket: to recharge the batteries (if rechargeable).

With practical magnetic support for fixing to the wall.

TECHNICAL SPECIFICATIONS

Code	Description	Pc/Pack
ERA P VIEW	Multifunction radio transmitter with intuitive graphic interface, to manage up to 99 devices singly or in groups	1

Code	**ERA P VIEW**
Power supply	2 AAA 1.5V alkaline batteries
Battery lifetime	about 1 year with 20 operations per day
Radio coding	Rolling code mancante**
Frequency	433.92 MHz (±100 kHz)
Range	Estimated 200 m in open space and 35 m indoors
USB socket	Micro USB
Operating temperature (°C)	-20; +50
Ingress protection class	IP 40
Dimensions (mm)	200x50x15 (without wall support)
Weight (g)	140

KOVOPROTOVARY.CZ

IMMEDIATE AND INTUITIVE SELECTION OF THE DEVICE TO BE CONTROLLED THANKS TO THE GRAPHIC INTERFACES

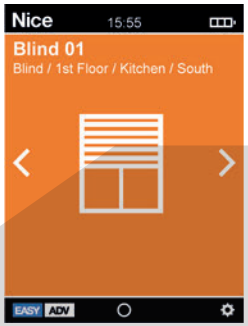

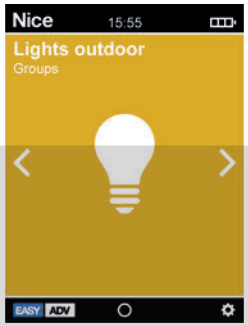

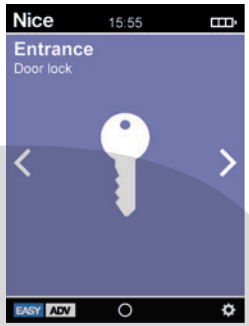

ADVANCED USERS: COMPLETE SELECTION MENU TO PROGRAMME AND MANAGE ALL DEVICES

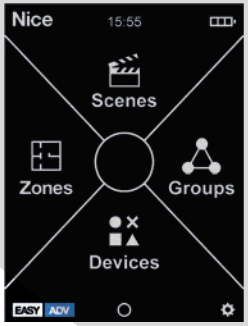

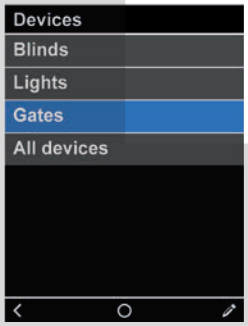

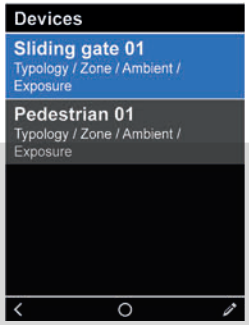

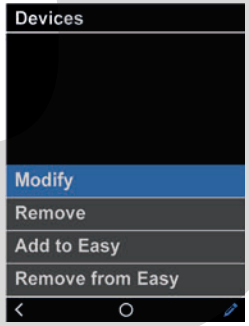

KOVOPLOTOVARY.CZ

Nice

Era Inti

Transmitters

The colourful line of 1 and 2 channel miniaturised transmitters, available in six colours.

433.92 MHz rolling code, with management of Identity Codes and Certificates, self-learning and built-in proximity receiver; with 72 bit O-Code encoding, also compatible with receivers with Nice FloR encoding.

Advanced: uses data processing and recognition systems that increase its degree of security and deliver a threefold reduction in automation response times.

Safe: if a transmitter is stolen or lost, it can be replaced through the O-Box, maintaining the same functions as before, and the old transmitter can be disabled by increasing the priority level on the new Inti.

Easy memorisation, even at a distance: thanks to Opera receivers.

There are two options for enabling a new Inti transmitter, even at a distance from the system:

- using a transmitter already programmed in the receiver, thanks to the enabling **Code exchange** between the two;
- using the Nice O-Box connection interface; the receiver's **Certificate** is entered by just placing the new Inti next to the O-Box and following the guided procedure on a PC or PDA.

Inti can be used as keyring thanks to the lace included in the pack.

TRANSMITTER TECHNICAL SPECIFICATIONS

Code	Description	Pc/Pack
INTI1Y	1 channel, 433.92 MHz, yellow	10
INTI2Y	2 channel, 433.92 MHz, yellow	10
INTI1R	1 channel, 433.92 MHz, red	10
INTI2R	2 channel, 433.92 MHz, red	10
INTI1L	1 channel, 433.92 MHz, lilac	10
INTI2L	2 channel, 433.92 MHz, lilac	10
INTI1G	1 channel, 433.92 MHz, green	10
INTI2G	2 channel, 433.92 MHz, green	10
INTI1B	1 channel, 433.92 MHz, blue	10
INTI2B	2 channel, 433.92 MHz, blue	10
INTI1	1 channel, 433.92 MHz, black	10
INTI2	2 channel, 433.92 MHz, black	10
INTIKIT	The kit contains: 3 two-channel Inti units (colours red, green and blue) 1 OX2 receiver.	10

	Carrier frequency	Estimated range	Encoding	Power supply	Battery life	Ingress protection class	Dimensions Weight
INTI_Y, INTI_R, INTI_L, INTI_G, INTI_B, INTI	433.92 MHz	150 m (outdoors); 30 m (if inside buildings)*	O-Code 72 bit; rolling code	3 Vdc; lithium battery type CR2032	2 years (with 10 transmissions per day)	IP40 (use in protected environments)	30x56x9 h mm 14 g

* Transmitter range and receiver reception capacity may be affected by any devices operating on the same frequency in the area.

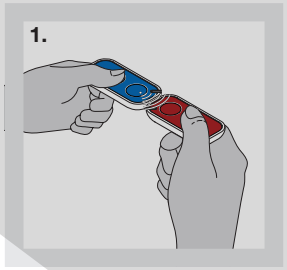

Code exchange between a memorized transmitter and a new one, to be memorized.

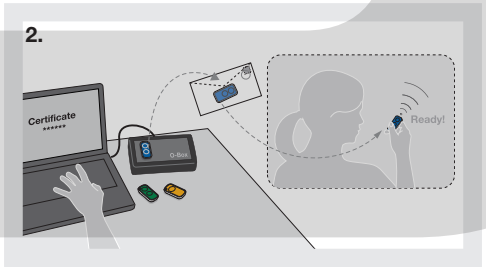

Possible memorisation using Nice O-Box and the "Certificate".

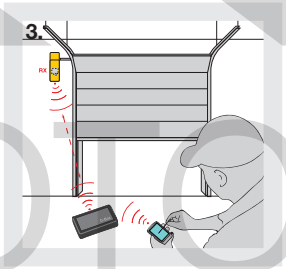

The presence of a "transmitter" in the OXIT, OX2T and OX4T receivers allows radio codes to be accessed by means of the O-Box multifunction interface.

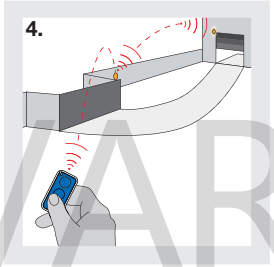

OXIT, OX2T and OX4T receivers can be used as signal repeaters.

KOVOPOLOTOVARY.CZ

UNINTIVERSAL!

Inti, the universal control!

Ideal for use in apartment blocks or multi-user systems.

Easy and cheap to install: combined with the OX2 universal receiver, the Inti transmitter is able to control and manage any automation, including pre-installed systems.

Intikit

KOVO POLOTOVARY.CZ

Nice

Era One

Transmitters and receivers

1, 2, 4, 9 channel transmitters and prewired receivers with connector, with and without built-in transmitter.

433.92 MHz rolling code, with management of Identity Codes and Certificates, self-learning and built-in proximity receiver; with 72 bit O-Code encoding, also compatible with receivers with Nice FloR encoding.

Available in versions with multiple input sequential encoding (Era OneC).

Advanced: uses data processing and recognition systems that increase its degree of security and deliver a threefold reduction in automation response times.

Easy memorisation, even at a distance: thanks to Opera receivers.

Safe: if a transmitter is stolen or lost, with the O-Box the user can **replace it**, maintaining the same functions as in the previous one, **disable**the old transmitter by increasing the priority level on the new Era One.

There are two options for enabling a new Inti transmitter, **even at a distance from the system:**

- using a transmitter already programmed in the receiver, thanks to the enabling **Code exchange** between the two;
- using the Nice O-Box connection interface; the receiver's **Certificate** is entered by just placing the new Inti next to the O-Box and following the guided procedure on a PC or PDA.

Extremely practical: using the O-Box software, the Era OneC version allows whole packs of 10 devices to be programmed in a single procedure, without even opening them!

Elegant and convenient: the Era One transmitter can be used as a stylish, high-tech keyring or fixed to the wall or your car's dashboard with the handy support included in the pack.

Era OneFM, ideal for use in cities or places where many devices are present.

868.46 MHz Rolling Code transmitter line, using frequency modulation (FM), less sensitive to interference than amplitude modulation AM.

TRANSMITTER TECHNICAL SPECIFICATIONS

Code	Description	Pc/Pack
ON1E	1 channel, 433.92 MHz	10
ON2E	2 channels, 433.92 MHz	10
ON4E	4 channels, 433.92 MHz	10
ON9E	9 channels, 433.92 MHz	10
ON1CE	1 channel, 433.92 MHz, with multiple input sequential encoding	10
ON2CE	2 channels, 433.92 MHz, with multiple input sequential encoding	10
ON4CE	4 channels, 433.92 MHz, with multiple input sequential encoding	10
ON1EFM	1 channel, 868.46 MHz	10
ON2EFM	2 channels, 868.46 MHz	10
ON4EFM	4 channels, 868.46 MHz	10
ON9EFM	9 channels, 868.46 MHz	10

	Carrier frequency	Estimated range	Encoding	Power supply	Battery life	Ingress protection class	Dimensions Weight
ON_E, ON_CE	433.92 MHz	200 m (outdoor); 35 m (if inside buildings)*	O-Code 72 bit; rolling code	3 Vdc; type CR2032 lithium battery	2 years (with 10 transmissions per day)	IP40 (use in protected environments)	45x56x11 h mm 18 g
ON_EFM	868.46 MHz						

* Transmitter range and receiver reception capacity may be affected by any devices operating on the same frequency in the area.

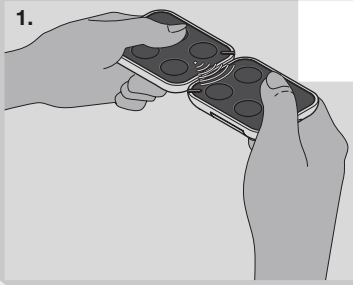

Code exchange between a memorized transmitter and a new one, to be memorized.

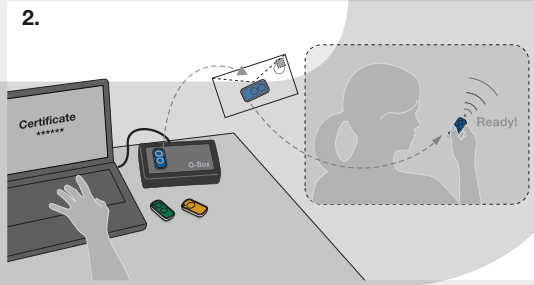

Possible memorisation using Nice O-Box and the "Certificate".

KOVOPOLOTOVARY.CZ

Nice

Era Flor

Transmitters and receivers

TRANSMITTER TECHNICAL SPECIFICATIONS

Code	Description	Pc/Pack
FLO1RE	1 channel Era FloR transmitter	10
FLO2RE	2 channel Era FloR transmitter	10
FLO4RE	4 channel Era FloR transmitter	10
FLO1RCE	1 channel Era FloR transmitter with multiple input sequential encoding	10
FLO2RCE	2 channel Era FloR transmitter with multiple input sequential encoding	10
FLO4RCE	4 channel Era FloR transmitter with multiple input sequential encoding	10

Carrier frequency	Estimated range	Encoding	Power supply	Battery life	Ingress protection class	Dimensions Weight
433.92 MHz	150/200 with tuned antenna in open spaces*	52 bit digital (4.5 million billion combinations)	3 Vdc; lithium battery type CR2032	3 years (with 10 transmissions per day)	IP40 (use in protected environments)	45x56x11 h mm 18 g

* Transmitter range and receiver reception capacity may be affected by any devices operating on the same frequency in the area.

FLO1RE

FLO2RE

FLO4RE

1, 2, 4 channel transmitters with a new stylish design.

433.92 MHz rolling code system with self-learning function.

Also available in versions with multiple input sequential encoding (Era FlorCE).

Absolute security: rolling code transmission makes the transmitter impossible to clone.

Ideal solution for the management of multi-user apartment block systems thanks to the unique, personal code.

Easy duplication of new transmitter close to the system by using an authorised transmitter or directly using a key on the receiver, while a LED displays the various functions.

Extremely practical: using the O-Box programming unit, the Era Flor-CE version allows whole packs of 100 devices to be programmed in a single procedure, without even opening them.

The O-Box and dedicated software applications for PC and PDA allow:

- **quick, user-friendly programming** of receivers and transmitters;
- **management** and printout **of code list**;
- creation of individual **installation databases** (useful in multi-user systems).

Optimal autonomy and low consumption.

Elegant and convenient: the Era FloR transmitter can be used as a stylish, high-tech keyring or fixed to the wall or your car's dashboard with the handy support included in the pack.

Total compatibility: with previous Flor series receivers (universal, universal modular and with Nice or SM connector) and with the One receivers (OXI/OXIT, OX2/OX2T and OX4T).

NOVOPOLOTOVARY.CZ

NiceWay

Modular control system to manage the range of Nice automations from any point within the home

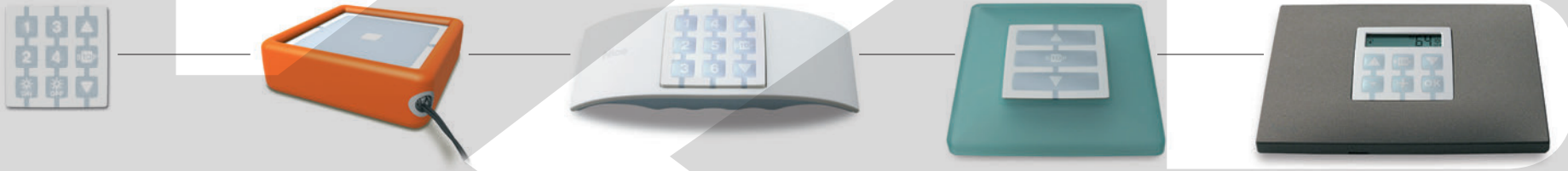

The transmitter module

GO
The module holder cover

Ondo
Wall or table shockproof holder

Opla
Squared wall plate

Opla
Rectangular wall plate

The heart of the NiceWay system

The 1, 3, 6 and 9-channel modules for the control of single automations, groups or multi-groups: awnings, roller shutters, rolling doors, gates, industrial and garage doors, barrier gate operators, lighting and irrigation systems.

Modular: The NiceWay system is based on a number of transmitter modules that can be placed in four different holder models to create a flexible range of made-to-measure solutions.

Although the modules, available from 1 to 80 groups or 240 channels, are very small in size, they are extremely easy to operate.

Advanced and compatible: Frequency of 433.92 MHz, 52 Bit Rolling Code with (over 4.5 million of billion combinations); self-learning function.

Compatible with the 433.92 MHz Nice Ergo, Plano, FloR and VeryVR systems (Flo and Smilo with WM240C and WM080G).

Estimated range: 200 m in a free field, 35 m indoors.

Extended battery life (3 V lithium battery).

All the NiceWay solutions: The 240 channel module with display, which controls 80 groups and 70 multi-groups, is ideal for the management of sophisticated systems.

All the awnings, roller shutters and gates, as well as the office, home and hotel irrigation and lighting systems in just 14 g and 16 cm^2.

Made-to-measure: To protect the electronic parts from dirt and damp, the rubber function buttons are incorporated in the actual body of the control modules. NiceWay can be used anywhere in the home, in the garage, the living room, the kitchen as well as the bathroom.

Professional: For a more professional and practical use, the system can be programmed by means of the handy Nice palmtops.

TECHNICAL SPECIFICATIONS

Code	**NiceWay**
Power supply	3 Vdc; type CR2032 lithium battery
Battery life	> 2 years (with 10 events/day)
Frequency	433.92 MHz ± 100 KHz
Radiated power	estimated at approx. 1 mW
Ingress protection class	IP40
Estimated range (m)	200 m in a free field, 35 m indoors
Encoding	52 bit rolling code
Operating temperature (°C Min. Max.)	-20 ÷ +55
Dimensions (mm)	41x41x10
Weight (g)	14

KOVOPLOTOVARY.CZ

NICE DESIGN

Sophisticated shock-proof materials, immaculate finish, and essential design: wear, comfort and ease are guaranteed by the internationally renowned and prize-winning Nice design.

The choice of discreet or personalised solutions is vast thanks to the wide choice of colours and finishes.

Module	Code	Description	Pc/Pack
MODULI CON COMANDO PASSO-PASSO			
	WM001C	Single channel module to control 1 automation system	10
	WM003C	Three channel module to control 3 automation systems	1
	WM009C	Three channel module to control 3 automation systems	1
Memorizing radio controls in Mode I: ON - OFF Mode II: ON/OFF - HOLD TO RUN - TIMER1 - TIMER2 (for the Screen products MODO II programmation)			
HYBRID MODULE TO CONTROL STEP-BY-STEP AND OPEN-STOP-CLOSE AUTOMATION SYSTEMS			
	WM003C1G	Module to control 3 Step-by-Step and 1 Open-Stop-Close automation systems	1
MODULES TO CONTROL OPEN-STOP-CLOSE AUTOMATION SYSTEMS			
	WM001G	Module to control 1 Open-Stop-Close automation system either individually or in multi-group mode	1
	WM002G	Module to control 2 Open-Stop-Close automation systems either individually or in multi-group mode	1
	WM003G	Module to control 3 Open-Stop-Close automation systems either individually or in multi-group mode	1
	WM006G	Module to control 6 Open-Stop-Close automation systems either individually or in multi-group mode	1
	WM004G	Module to control 4 Open-Stop-Close automation systems either individually or in multi-group mode and sun sensor activation command	1
MULTI-CHANNEL DISPLAY MODULE			
	WM080G	Module to control 80 Open-Stop-Close automation systems either individually or in multi-group mode and sun sensor activation command	1
	WM240C	Module to control 240 Step-by-Step automation systems either individually or in multi-group mode	1

KOVOPOLOTOVARY.CZ

Opla

NiceWay - Opla
Wall plaques

Elegant, discreet and functional: Extremely slim - as is the plate itself - the transmitter inserted into the Opla wall plate permits to inconspicuously and fetchingly add additional control points without having to perform any building operations.

The NiceWay Opla wall plates are available in the square Opla-S version and the rectangular Opla-R version and in many different colours.

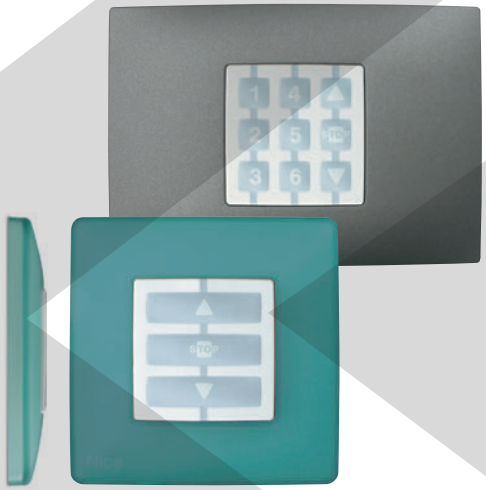

Code	Description	Pc/Pack
WSW	Squared wall plate, white	10
WSB	Squared wall plate, black	10
WSA	Squared wall plate, aluminium	10
WSG	Squared wall plate, graphite	10
WST	Squared wall plate, neutral transparent	10
WSS	Squared wall plate, seawater	10

Code	Description	Pc/Pack
WRW	Rectangular wall plate, WHITE	10
WRB	Rectangular wall plate, black	10
WRA	Rectangular wall plate, aluminium	10
WRG	Rectangular wall plate, graphite	10
WRT	Rectangular wall plate, neutral transparent	10
WRS	Rectangular wall plate, seawater	10

WSW, WRW

WSB, WRB

WSA, WRA

WSG, WRG

WST, WRT

WSS, WRS

KOVOPLOTOVARY.CZ

Nice

Ondo

NiceWay - Ondo
Portable, wall mounted and table-top supports

Portable, from table to wall: Ondo is the versatile NiceWay line support; the wall support with its simple magnetic fixing system, transforms Ondo from a comfortable portable transmitter to an inconspicuous wall plate.

Ondo, made in a shiny dirt-resistant plastic, has a rubber lower section to improve grip and prevent slipping when used on surfaces.

The transmitter module can be inserted so that Ondo can be used both in width and in length to increase the personalisation possibilities.

Code	Description	Pc/Pack
WAX	Table holder, white plastic and ice blue rubber	10
WWW	Magnetic wall support for WAX	10

WAX

WWW

Nice

Go

NiceWay - Go
Mini cover

Go Nice! Snugly in the pocket!

Every NiceWay transmitter really becomes portable with the Go support: the maximum performance to manage up to 240 channels from anywhere and with the maximum compactness.

Made of shock-proof rubber, in different and exclusive colours, Go protects the module from the most severe of knocks.

Go can be hung anywhere and can also be used as a key-ring thanks to the tie that is included in the pack.

Code	Description	Pc/Pack
WCF	Mini cover, fern green	10
WCG	Mini cover, graphite	10
WCI	Mini cover, Ice Blue	10
WCO	Mini cover, orange	10

WCF

WCG

WCI

WCO

KOVOPOLOTOVARY.CZ

Nice

Receivers

Era Inti, One, Flor, NiceWay

The complete line of receivers with Opera system functions, suitable for all installation requirements:

- **with connector**, compatible with latest-generation Nice control units with SM port;
- **universal prewired**, for use with all types of control unit, for the control of any automation, lighting or irrigation system or other electric circuits.

Maximum flexibility: up to 1024 transmitters can be memorised.

Convenient and practical: the inclusion of a transmitter in the OXIT/OXITFM, OX2T/OX2TFM and OX4T receivers allows radio codes to be accessed by means of the O-Box multifunction interface even when in inaccessible positions.

OXIT/OXITFM, OX2T/OX2TFM and OX4T receivers can be used as signal repeaters to increase the operating distance between transmitters and other One series receivers.

Secure use, thanks to the 3 password-protected levels.

The O-Box and dedicated software applications for PC and PDA allow:

- **quick, user-friendly programming** of receivers and transmitters;
- **management** and printout **of code list**;
- creation of individual **installation databases** (useful in multi-user systems).

SM plug-in receiver with Flor system functions, step-by-step and anti-burglar functions.

Management of multi-user system: through the unique, personal code: the recognition receivers can receive and memorise up to 255 codes.

Memorisation: a particular receiver output can be associated to each transmitter key (e.g. key 3 TX= output 1 RX).

433.92 MHz RECEIVERS, WITH OPERA SYSTEM FUNCTIONS

Code	Description	Pc/Pack
A INNESTO		
OXI	4 channels, without built-in transmitter	1
OXIT	4 channels, with built-in transmitter	1
PRECABLATO UNIVERSALE		
OX2	2 channels, without built-in transmitter	1
OX2T	2 channels, with built-in transmitter	1
OX4T	4 channels, with built-in transmitter	1

OXI

OX2, OX2T

OX4T

868.46 MHz RECEIVERS, WITH OPERA SYSTEM FUNCTIONS

Code	Description	Pc/Pack
A INNESTO		
OXIFM	4 channels, without built-in transmitter	1
OXITFM	4 channels, with built-in transmitter	1
PRECABLATO UNIVERSALE		
OX2FM	2 channels, without built-in transmitter	1
OX2TFM	2 channels, with built-in transmitter	1

OXIFM, OXITFM

OX2FM, OX2TFM

433.92 MHz RECEIVERS, WITH FLOR SYSTEM FUNCTIONS

Code	Description	Pc/Pack
A INNESTO SM		
SMXI	Up to 4 channels with 256-codes memory	1
ANTENNE PROFESSIONALI ACCORDATE ORIENTABILI		
ABF	Bracket mounted	1

KOVOPOLOTOVARY.CZ

MULTI-FUNCTION INTERFACE

Code	Description	Pc/Pack
OBOX2	Dual Band Interface, for 433.92/868.46 MHz devices, complete with software, supplied with USB connection cable	1
OBOX2B	Dual Band Interface, for 433.92/868.46 MHz devices, complete with software, with USB connection cable and built-in Bluetooth module	1

O-BOX

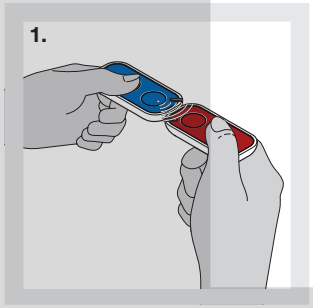

Code exchange between a memorized transmitter and a new one, to be memorized.

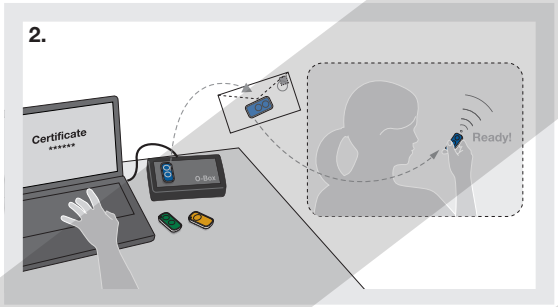

Possible memorisation using Nice O-Box and the "Certificate".

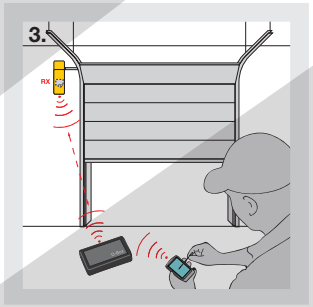

The presence of a "transmitter" in the OXIT, OX2T and OX4T receivers allows radio codes to be accessed by means of the O-Box multifunction interface.

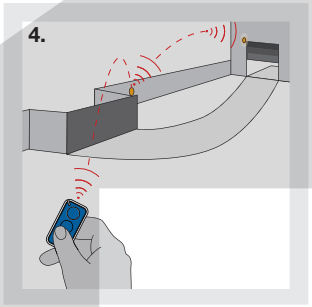

OXIT, OX2T and OX4T receivers can be used as signal repeaters.

RECEIVER WITH OPERA SYSTEM - TECHNICAL SPECIFICATIONS

Code	Reception frequency (MHz)	Transmission frequency (MHz)	Input impedance (Ohm)	Sensitivity	Encoding	Number of channels	Relay contact	Power supply	Absorption	Ingress protection class	Dimensions (mm)	Weight (g)
OXI	433,92	-	50	>0.5 µ V for successful signal	O-Code, O-Code/A, FloR, FloR/A, Flo, Smilo	4 (15 on BUS T4)	-	5 Vdc	50 mA (max)	IP 30	49.5x18x41.9 h	22
OXIT		433,92	52		O-Code, FloR, Flo				30 mA (max)		50x19x45 h	20
OX2		-				2	max 0.5 A 50 V (NA)	from 12 to 28 Vdc/Vac	80 mA (max) with relays active		58x86x22 h	55
OX2T												
OX4T		433,92				4 relays with NO and NC contacts, voltage-free	5 A - 250 V	110 ÷ 240 Vac 50/60 Hz	80 mA	IP 44 (with container intact)	128x112x43 h	260
OXIFM	868,46	-		>0.8 µ V for signals with successful outcomes	O-Code	4 (15 on BUS T4)	-	5 Vdc	30 mA (max)	IP 30	50x19x45 h	20
OXITFM		868,46										
OX2FM		-				2	max 0.5 A 50 V (NA)	from 12 to 28 Vdc/Vac	100 mA (max) with relays active		58x86x22 h	55
OX2TFM		868,46										

RECEIVER WITH FLOR SYSTEM - TECHNICAL SPECIFICATIONS

Code	Reception frequency (MHz)	Input impedance (Ohm)	Sensitivity	Power supply	Absor. when quiescent	Encoding	Number of channels	Relay contact	Dimensions (mm)
SMXI	433.92 quartz controlled	52	> 0,5 µV for signals with successful outcomes	5 Vdc	-	52 digital bits (4.5 million billion comb.)	4	-	50x18x46 h

ACCESSORIES - TECHNICAL SPECIFICATIONS

Code	Reception frequency (MHz)	Impedance (Ohm)	Bracket	Cablec
ABF	433,92	50	stainless steel	RG 58

KOVO POLOTOVARY.CZ

Nice

NEW BiDi

Pro-View

Multi-function interface

Product available from 2020

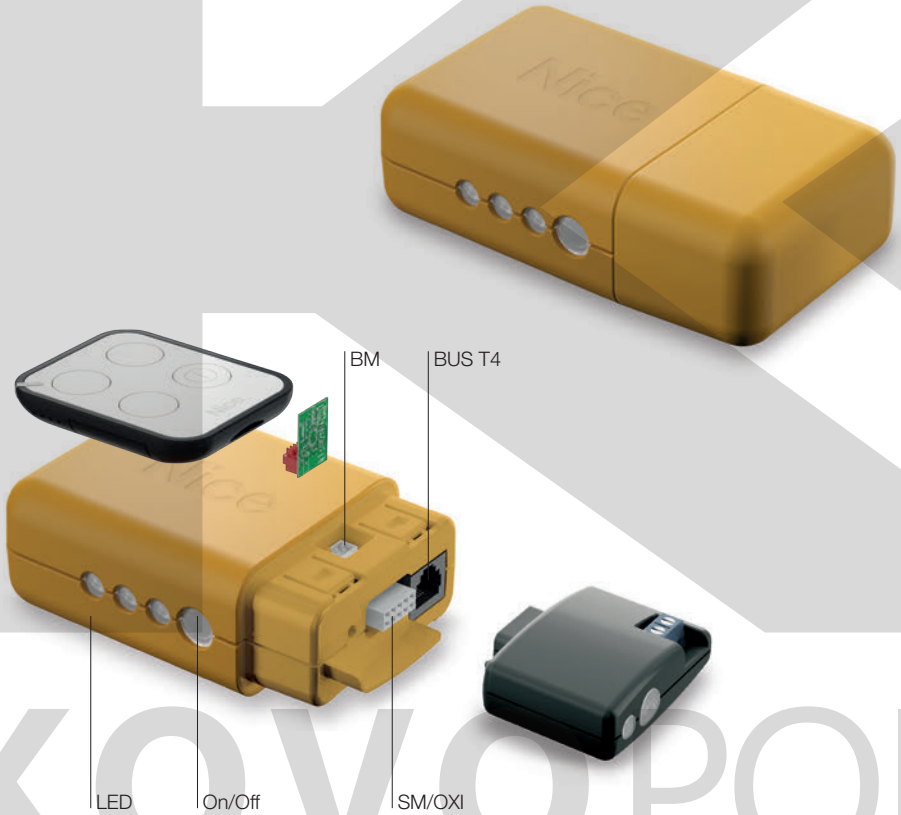

The new Pro-View interface connects to Nice control units by BUS T4 and enables Nice automation systems to be installed and configured by smartphone via the MyNice Pro App.

Advanced: the interface includes the functions of the traditional O-View and OBox and is also equipped with RFID and NFC readers. Thanks to the Nice bidirectional protocol, the new Nice bidirectional receivers and transmitters can be accessed and programmed.

By connecting the interface to the automation control unit, professionals can configure the device directly from their smartphone via the MyNice Pro App.

Pro-View is conceived to give professionals a new generation tool to make their work easier and facilitate installation. The numerous functions simplify the installer's work.

Advantageous: via the MyNice Pro App and the Nice Cloud, installers can configure the automation simply and intuitively following the guided programming procedure, control the status of its accessories, create and manage a database of their installations with absolute safety, monitor the status of the systems at all times, manage programming remotely and also provide the customer with remote assistance.

Sturdy: the special protective case is designed to stand up to the stress of a hard day's work.

Handy: compact and battery powered (2 hours autonomy), Pro-View is easy to take with you wherever you go.

Pro-View is compatible with all Nice receivers with SM/OXI and BM connector.

With Pro-View, you can also:

- via radio, programme One series unidirectional and bidirectional transmitters and Inti;
- via radio, manage all functions of One series unidirectional and bidirectional transmitters and Inti with built-in transmitter;
- read and write transponder Badges in the Moon series;
- program receivers in the series Smilo, Bio, FloR and One and memories of the control devices MOMB, MOTB and MORX.

TECHNICAL SPECIFICATIONS

Code	Description	Pc/Pack
PROVIEW	Multi-function interface	1

Code	**PROVIEW**
Input	5V microUSB connector
Optional battery power	2x AA NiMh rechargeable
Maximum absorbed power (mW)	1,5
Wi-Fi interface with internal antenna	802.11b/g/n – 2,4 GHz (P<10mW)
Safety	OPEN/WEP/WPA-PSK/WPA2-PS
Interfaces	NFC, RFID (LF), SM, BM, T4
Dual band radio transmission	Dual band bidirectional 433.54 - 433.92 MHz 868,3 - 868,94 MHz (P<10mW)
Protection level (IP)	30
Operating temperature(°C Min/Max)	-20 ÷ +50
Dimensions (mm)	113x64x33
Weight (g)	100

* Transmitter range and receiver reception capacity may be affected by any devices operating on the same frequency in the area and by the position of the system's radio antenna.

ACCESSORIES

Code	Description	Pc/Pack
CABLA06	Cable for programming receivers universal in the series "SMX" and "OX"	1

KOVOPOLOTOVARY.CZ

Nice

NEW BiDi

My Nice Pro App

Product available from 2020

The **MyNice Pro** App allows Nice installers to work on automations directly from their smartphone via the **Pro-View** multifunction interface.

A single tool, a great many functions, with the MyNice Pro App you can:

- set up the automation simply and intuitively following the guided programming procedure;
- set and manage all the configuration parameters of the automation systems;
- manage accessories such as transmitters and RFID devices;
- view diagnostics, manage programming remotely and also provide remote assistance;
- save the last backup of the control unit configuration on the Nice Cloud, archive the backup log on your device and call up the saved information whenever you want;
- rapidly access the product documentation or make remote assistance calls, with real time sharing of the screen and camera of the device;
- create, geolocate and manage installation remotely on an intuitive dashboard, include a photograph of the installation;
- automatically recognise the automation system, update the control unit firmware and download the instruction manual;
- draw up precise estimates using a guided tool and save them on the Nice Cloud to have them on hand at all times.

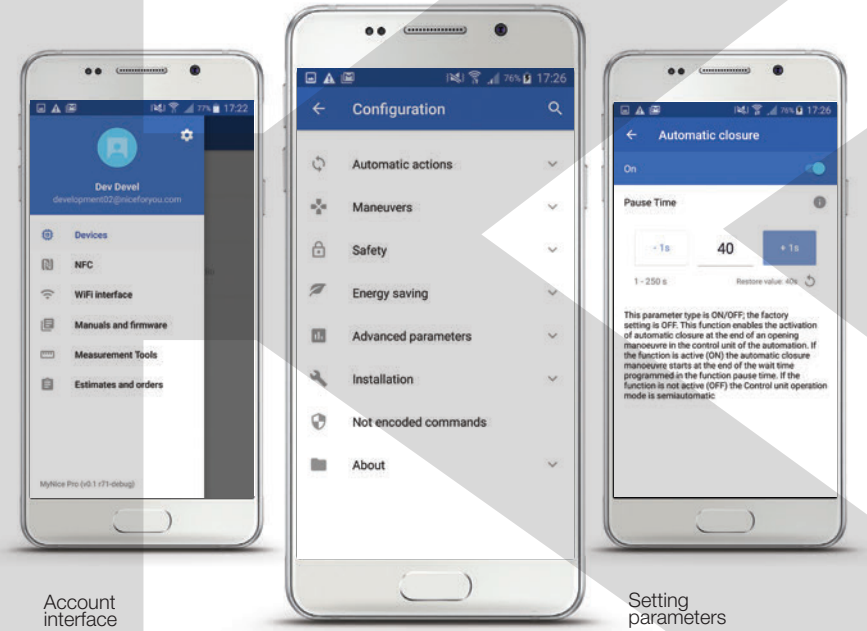

Account interface

Configuration tools

Setting parameters

Nice Cloud

Maximum speed and efficiency in managing the work. Through the Nice Cloud section dedicated to installers, you can:

- view all your installations;
- view all your interventions;
- include photographs of the installation;
- the administrator profile can create further users able to use all the functions, so you can monitor the work of the whole team at all times.

KOVOPOLOTOVARY.CZ

Nice

Opera

Opera Control, advanced management of automation systems also at a distance.

The Opera system enables the installer to manage, program and control automation systems, also remotely, simply and safely, with significant savings in time.

The Opera system comprises transmitters and One series receivers, the O-Box connection interface and the communication software “O-View Software Suite” and “O-Box Software Suite”.

All components communicate via BUS T4 or the O-Code Rolling Code system, making transmissions safer and reducing automation response times.

Nice Opera simplifies the installer’s work, making for easier programming, and enabling access to all control panel parameters to adapt the system to all requirements.

No specific procedures needed for each product: single programming mode with intuitive menus, with no need to consult instructions.

Constantly efficient assistance for all customers: simplifies system programming by means of the O-View multifunction display which when connected directly to the control panels compatible with the Opera system via BUS T4, enables full access to the system functions, for practical, rapid and advanced programming.

BUS T4 is the communication protocol that enables you to create extensive networks of compatible automation systems, managing them from a single point via O-View.

Device management can be protected by two password levels. By interfacing the system with the PC, you can control a complex automation system, such as those found in densely frequented buildings (hospitals, hotels, companies, etc.).

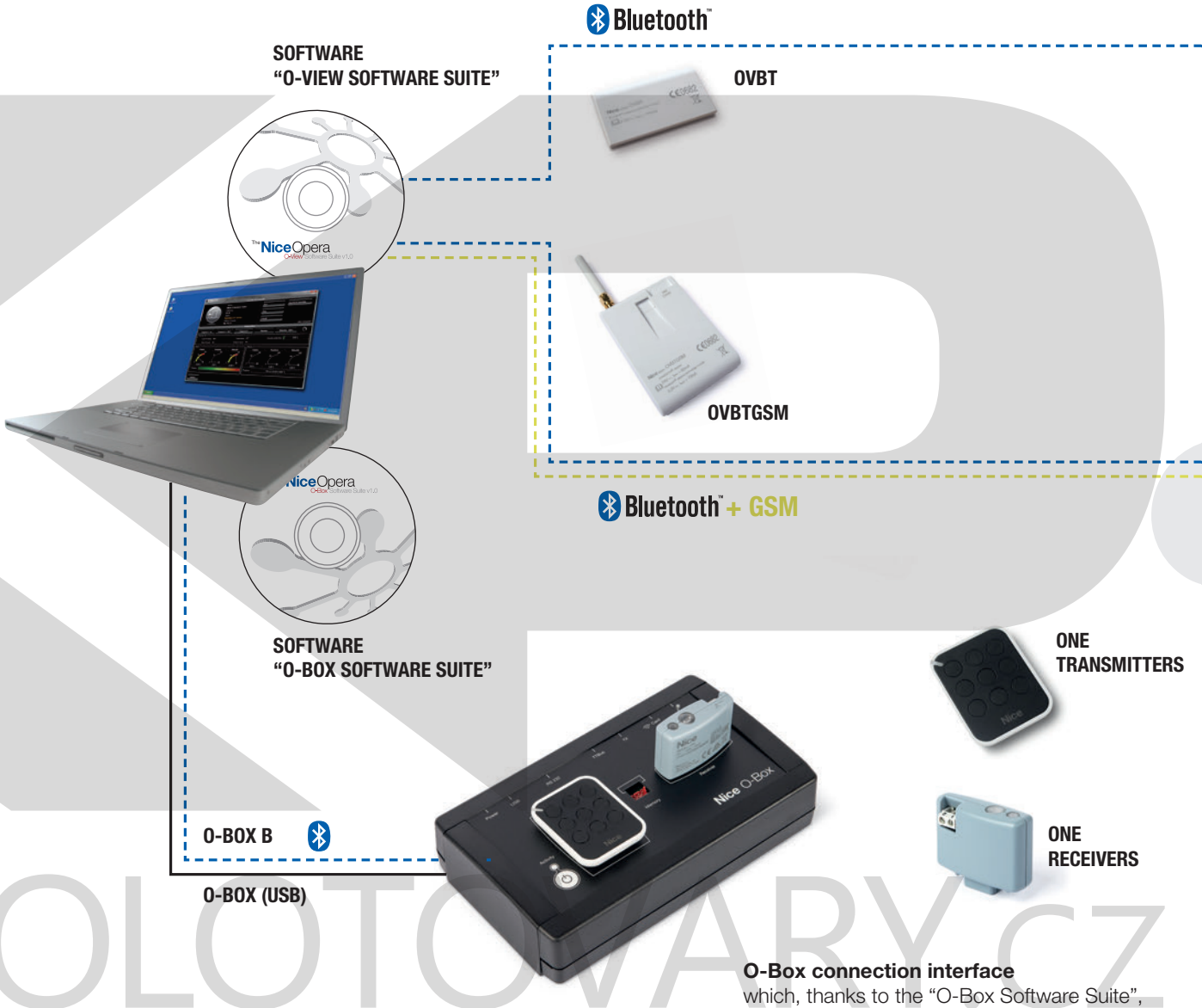

O-Box connection interface
which, thanks to the “O-Box Software Suite”, enables the configuration and programming of all Nice control devices, from the PC or PDA.

KOVOPOLOTOVARY.CZ

<<< BUS T4

O-View, multifunction display
Unit for control, programming and diagnostics **for devices equipped** with BUS T4 connection, on site or remotely via GPRS thanks to the connection with your PDA, Smartphone or PC.

Gates

Garage doors

Barriers

<<< BUS T4

Universal 4-channel receiver
with built-in transmitter. For remote control of any automation, irrigation and lighting systems or other electrical circuits.

For Nice Motors not designed for

Rolling shutters

Garage doors

Gates

Barriers

Lighting systems

Irrigation systems

Opera
KOVO POLOTOVARY.CZ

O-View

Multipurpose control unit

OVBT

OVBTGSM

O-VIEW SOFTWARE SUITE

Unit for control, programming and diagnostics for devices equipped with BUS T4 connection, on site or remotely via GPRS thanks to the connection with your PDA, Smartphone or PC.

Advanced management: O-View connects to the compatible control unit by IBT4N interface and BUS T4 cable (supplied), providing access to all control unit parameters to adapt the system to every need.

By connecting O-View permanently to a control unit or group of control units via BUS T4, a network can be created for local or remote centralised management.

Programmable: thanks to the built-in clock, it is also possible (with integrated backup battery) to program delivery of commands at a set time, for example to automate opening and closing of complex industrial and commercial systems or for the creation of “scenarios”.

A practical wall-mounted support supplied.

Simple programming mode: with intuitive menus valid for each product, with no need to consult the specific instructions.

O-View powers up and automatically recognises all devices on the network as soon as it is connected, displaying only the specific parameters of the device on which to intervene.

In the case of several devices on the network the BUS T4 address is identifiable by means of a text label personalised as required, enabling rapid recognition of the associated device.

Safe: two password- protected levels (for the user and the installer).

Practical: O-View is your portable office, and can be connected just when programming or for maintenance, or can be installed permanently on site to exploit all the benefits of local or remote centralised management.

TECHNICAL SPECIFICATIONS

Code	Description	Pc/Pack
OVIEW	Unit for control, programming and diagnostics of devices equipped with BUS T4 connection	1
OVBT	Bluetooth module for O-View and “O-View Software Suite” application for PC, PDA or Smartphone	1
OVBTGSM	GSM module for O-View and “O-View Software Suite” application for PC, PDA or Smartphone	1

Graphic interface	LCD display 128x64 dots (46x29 mm); 2.2”
Operator input device	Joypad with 5 + 2 keys
Display/key lighting	White light
Time and date display	With backup battery (min. lifetime 10 years)
Maximum number of commands per hour	64
Event log	Storage capacity 400 events
Connection cable length (m)	2 (cable supplied); 700 (other cable)
Power supply	Supplied by devices on BUS T4 network
Absorbed current (mA)	Max. 20 (without accessories)
Insulation	Class III
Housing protection rating (IP)	20
Working temp. (°C Min/Max)	From -20° to +55°
Dimensions (mm)	107x61x20 h (with wall-mounted support: 125x70x32 h)
Weight (g)	75 (without cable)

ACCESSORIES

Code	Description	Pc/Pack
OVA1	Clamp for fitting connectors RJ14	1
OVA2	Connectors RJ14, type 6/4, for flat 4-wire cable	5
OVA3	RJ14 splitters, type 6/4, for cascade connection of devices on BUS T4 network	5
OVA4	Flat 4-wire cable for connection of devices on BUS T4 network, length 100 m	1

OVA1

OVA2

OVA3

OVA4

KOVOPOLOTOVARY.CZ

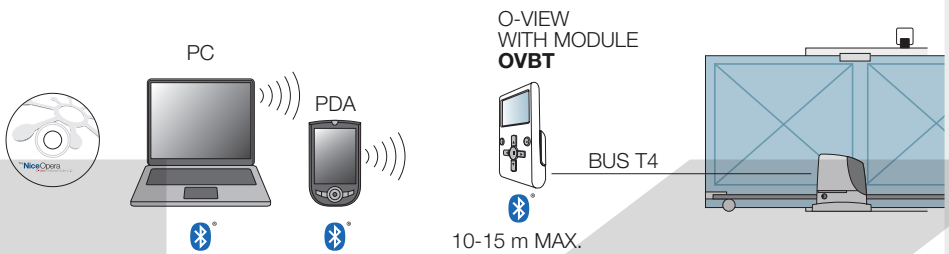

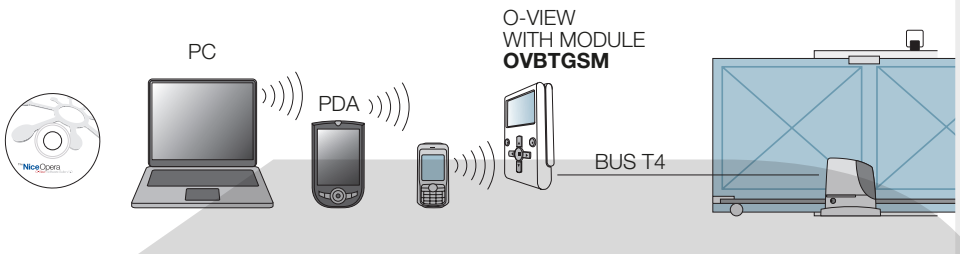

OVBT

Bluetooth connection module for O-View interface.

"O-View Software Suite" enables connection via PC or PDA to O-View in the vicinity of the system, to intervene on the control units on the BUS T4 network.

Maximum connection distance 15 m.

O-VIEW SOFTWARE SUITE

This application, supplied with OVBT and OVBTGSM, as well as expanding the functions of O-View enables the creation of a database of installations with personal data of clients and configurations of each system, even on more complex versions.

By connecting to the site www.niceforyou.com users can download the constantly updated firmware and software versions.

The interface of "O-View Software Suite" has been specially designed to enable rapid access to all parameters of the connected devices without the need for physical access, as well as quick diagnostics of malfunctions by consulting the event log, all the most practical and intuitive way possible.

The O-View control function has been expanded: in just one PC screen, all applications connected via BUS T4 can be controlled.

Minimum requirements

O-View Desktop version for PC:

- Processor: type AMD®/Intel® (500 MHz) - Recommended by Nice: type AMD®/Intel® (1 GHz)
- RAM: 128 MB - Recommended by Nice: 256 MB
- Free space on disk: 280 MB - Recommended by Nice: 512 MB
- Operating system: Operating system: Windows® 98 SE or later - Recommended by Nice: Windows® 2000 or later up to Win 7
- Connection: Bluetooth®
- Graphics resolution: 800 x 600, 256 colours
- Disk drive: CD-Rom (required for installation).

NOTE Software installation includes installation of the Microsoft®.NET Framework Redistributable 2.0 programme.

OVBTGSM

In addition to the benefits of the OVBT module, the automation or network of automations can now be **controlled via GSM** by connecting O-View to the system via BUS T4.

A GPRS connection also enables connection via the Internet to O-View to obtain all management functions offered by the software from any location with no need for presence on site.

The user can remotely control the automation via GSM, from any of the enabled numbers, and check status, such as opening a gate by means of a phone call or by sending 4 different controls via SMS text message, with the security offered by entry of a unique password.

INB, the Nice control interface that enables communication between the systems Nice Bus (TTBus and BusT4) and MyHome of BTicino (SCS).

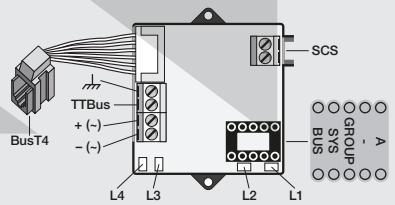

TECHNICAL SPECIFICATIONS

Code	Description	Pc/Pack
INB	Communication interface between Bticino Bus (SCS) and Nice Bus (TTBus and BusT4)	1

	Power supply	Consumption	Insulation	Protection level (IP)	Working temp. (°C Min. Max)	Dimensions (mm)
INB	to BusT4, or 24 Vac/dc (limits 20 ÷ 35 Vdc, 22 ÷ 35 Vac)	approx. 18 mA	class III	20	-20÷50 °C	41x52x18h

KOVO POLOTOVARY.CZ

O-Box

Connection interface

O-Box is the multi-function interface which, thanks to the dedicated software "O-Box Software Suite", enables the configuration and programming directly from the PC or PDA, practically and intuitively, all transmitters, receivers and other Nice control devices.

O-Box interfaces with your PC or PDA palmtop, performing the control, entry, deletion, enabling or disabling of codes, programming of the memory, functions and typical parameters of the receivers, transmitters and other Nice control devices.

Universal: O-Box manages all programming procedures possible by means of BUPC.

It also enables import of databases previously created using the software for BUPC.

The convenience of remote control: O-Box enables a number of tasks to be performed directly from the office, without the need to visit the client's system.

For example the operator can program the functions and parameters of transmitters with the utmost of ease, and send them already configured and operative to the clients.

It is also possible to:

- program transmitters in the One series via radio;
- manage all functions via radio of the receivers in the One series fitted with built-in transmitter;
- read and write transponder Badges in the Moon series;
- receive data via radio from transmitters in the series Smilo, VeryVE, Flo, VeryVR, FloR, One, Niceway or via optical reader for transmitters in the Bio series;
- program receivers in the series Smilo, Bio, FloR and One and memories of the control devices MOMB, MOTB and MORX;
- create and manage an updated database with personal data of clients and configurations of the receivers installed in the respective systems.

The software "O-Box Software Suite" can be installed quickly and easily either on PC (O-Box Desktop version) or on PDA palmtop (O-Box Mobile version).

Minimum requirements

O-Box Desktop version for PC:

- Processor: type AMD®/Intel® (500 MHz) - Recommended by Nice: type AMD®/Intel® (1 GHz)
- RAM: 128 MB - Recommended by Nice: 256 MB
- Free space on disk: 280 MB - Recommended by Nice: 512 MB
- Operating system: Operating system: Windows® 98 SE or later - Recommended by Nice: Windows® 2000 or later up to Win 7
- Connection: Bluetooth®
- Graphics resolution: 800 x 600, 256 colours
- Disk drive: CD-Rom (required for installation).

TECHNICAL SPECIFICATIONS

Code	Description	Pc/Pack
O80X2	Multipurpose interface complete with software "O-Box Software Suite" with USB connection cable supplied. Dual Band, for devices at 433.92/868.46 MHz	1
O80X2B	Multipurpose interface complete with software "O-Box Software Suite" with USB connection cable and integrated Bluetooth module. Dual Band, for devices at 433.92/868.46 MHz	1

Code	**O80X2**	**O80X2B**
Reception frequency (MHz)	433.92/868.46	
Estimated range (m)	10	
Communication with Windows	USB, RS232	Bluetooth, USB, RS232
Communication with Windows Mobile	-	Bluetooth
Working temp. (°C Min/Max)	-20 ÷ +55	
Dimensions (mm)	195x116x48	
Weight (g)	412	418

ACCESSORIES

Code	Description	Pc/Pack
ALA1	Battery charger power supply unit	1
CABLA01	Cable for connecting O-Box to the computer via the RS232 port	1
CABLA02	Optical reader for programming transmitters in the series "Bio" and "FloR"	1
CABLA03	Cable for cloning transmitters in the series "Very"	1
CABLA04	Cable for cloning transmitters in the series "Bio" and "FloR"	1
CABLA05	Cable for programming tubular motors for awnings and shutters, equipped with port TTBUS	1
CABLA06	Cable for programming receivers universal in the series "SMX" and "OX"	1
CABLA07	Cable for cloning transmitters in the series "Ergo" and "Plano"	1
CABLA09	Cable for cloning transmitters in the series "ERA-FLOR"	1

NOTE Software installation includes installation of the Microsoft®.NET Framework Redistributable 2.0 programme.

KEYPOLICE.CZ

OX4T

Universal 4-channel receiver in the One series, with built-in transmitter

For remote control of any automation on gates, garage doors, road barriers, shutters, awnings, venetian blinds, irrigation and lighting systems or other electrical circuits.

Equipped with BUS T4 connector for connection to O-View.

An extended system: OX4T manages 4 outputs controlled by 4 relays, usable as power relays or voltage-free contacts, to extend use of the Opera system also to devices with specific provisions.

Thanks to the internal transmitter, OX4T can be used as a repeater, thereby increasing the operating range between transmitters and other receivers in the One series.

Practical and functional: OX4T can be connected via radio to the interface O-Box and via BUS T4 to the multifunction display O-View, to enable programming, diagnostics, timed functions and management of codes, also remotely by means of the modules OVBT and OVBTGSM.

2 programming modes: "Mode I" and the new "extended Mode II" which enables expansion of the number of controls to up to 14.

Multicode: OX4T is also compatible with the transmitters with encoding system O-code, Smilo, Flo, FloR, FloR and TTS.

OX4T is fitted with a generously sized memory to enable storage of up to 1024 transmitters, with the option for password protection.

TECHNICAL SPECIFICATIONS

Code	Description	Pc/Pack
OX4T	Universal 4-channel receiver in the One series, with built-in transmitter	1

Power supply (Vac 50/60 Hz)	110 ÷ 240
Maximum absorbed current (mA)	80
Encoding	O-Code / TTS / FloR (Rolling Code); or Smilo (Rolling Code) or Flo
Frequency (MHz)	433,92
Antenna impedance (Ohm)	More than 0.5 for successful signal
Estimated range (m)	200 m in a free field, 35 m indoors
Radiated power (Dbm)	+2
Max. capacity of transmitter memory	1024 (maximum)
Outputs	4 relays with NO and NC contacts, voltage-free
Contact capacity	5 A - 250 V
Timer times	Programmable from 2 seconds to 540 minutes
Protection level (IP)	44 (with container intact)
Working temp. (°C Min/Max)	From -20° to +55°
Dimensions (mm)	128x112x43 h
Weight (g)	260

ACCESSORIES

Code	Description	Pc/Pack
OVA1	Clamp for fitting connectors RJ14	1
OVA2	Connectors RJ14, type 6/4, for flat 4-wire cable	10
OVA3	RJ14 splitters, type 6/4, for cascade connection of devices on BUS T4 network	5
OVA4	Flat 4-wire cable for connection of devices on BUS T4 network, length 100 m	1

OVA1

OVA2

OVA3

OVA4

KOVOPOLOTOVARY.CZ

Tag system

The ideal solution for refurbishment projects

Nice Tag system, the simpler solution: miniaturised control units and universal concealed transmitters for practical radio management of rolling shutters, awnings, blinds, lighting and electrical loads up to 500 W not reachable directly by cable.

Ideal for renovations and upgrades to existing systems, the units can be installed inside commonly available wall plates and in tight spaces.

No need to replace the existing automation installation or to carry out building work.

KOVOPOLOTOVARY.CZ

SYSTEM ADVANTAGES:

Easy to install and programme

No building work, no wired connections and no need to plan the electronic wiring.

Intuitive programming using the programming button and LED on the miniaturised control units.

Savings in time and costs.

Perfect for every need

Simple individual or centralised automation management.

Possibility to comfortably control the entire system using portable or mains powered wall-mounted transmitters.

An additional control point can be created by connecting the miniaturised control unit via cable to the existing wall switch.

DISCOVER THE OTHER COMPONENTS IN THE SYSTEM:

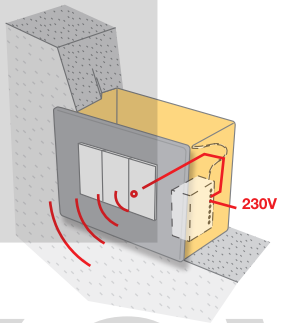

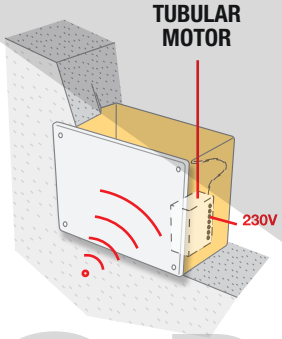

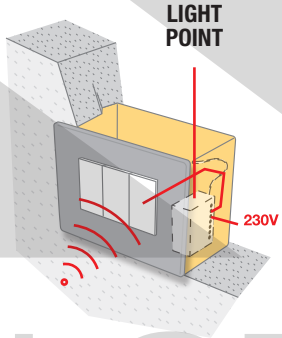

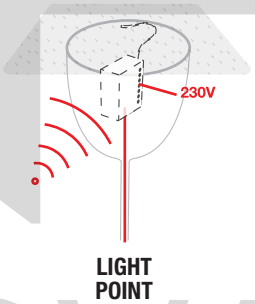

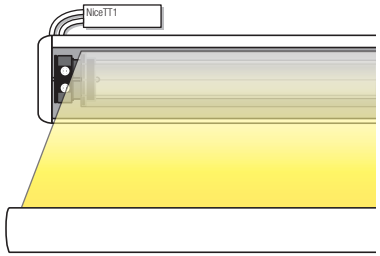

1

Recessed transmitters, **model TTX4** with mains power supply, and **TTXB4**, battery-powered.

Ideal for controlling automations not reachable directly by wire.

2

TT2N, radio receiver and control unit to control one 230 Vac motors up to 500 W.

TT2Z, radio receiver and control unit for dry contact controlled motors, tubular motors with 4-wire power cable and lights.

3

TT2L radio receiver and control unit for lighting systems.

TT2D radio receiver and control unit to control lighting installations from a number of points, with built-in switching module.

4

Built-in TTDMS radio receiver for electrical loads up to 250 W, on/off and dimmer functions.

5

Mindy TT1 miniaturised radio receivers and control units for sun awnings, outdoor Venetian blinds, rolling shutters and lighting and irrigation systems.

IP protection class more than 50.

KOVOPOLOTOVARY.CZ

Nice

TTX4 / TTXB4

Recessed transmitters to control automations

Recessed transmitters ideal for controlling automations not reachable directly by cable.

433.92 MHz frequency, with 52 bit rolling code (more than 4.5 million billion combinations).

TTX4, with mains power supply and TTXB4, powered by long life battery.

Possibility of connecting up to 4 pushbuttons (optional) for wired control of the automations.

TECHNICAL SPECIFICATIONS

Code	Description	Pc/Pack
TTX4	Recessed transmitter powered by mains electricity, 4 channels	1
TTXB4	Recessed transmitter, battery-powered, 4 channels	1

Code	**TTX4**	**TTXB4**
Power supply	120 or 230 Vac, 50/60 Hz; (limits 100 - 255 V)	3 Vdc; type CR2032 lithium battery
Carrier frequency	433.92 MHz ± 100 KHz	
Estimated range	35 m indoors	
Encoding	Digital 52 bit (4.5 million billion combinations)	
Protection level (IP)	20	
Working temp. (°C Min/Max)	-20° ÷ +55°	
Dimensions (mm)	18x33x40 h	

KOVOPOLOTOVARY.CZ

Nice

TT2N

Radio receiver and recessed control unit to control one 230 Vac motor

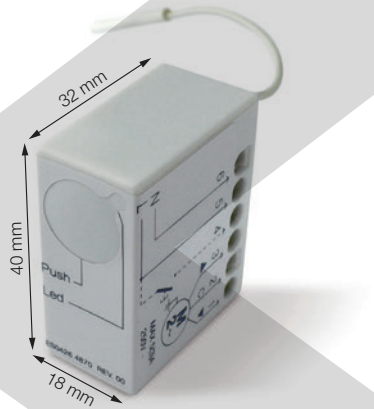

Recessed miniaturised radio receiver and control unit for controlling one 230 Vac motor, up to 500 W.

Protection class IP20.

Quick easy programming: thanks to the dedicated pushbutton.

An **LED indicator** helps the user follow the correct programming procedure, for example indicating when the set thresholds of the climatic sensor are exceeded.

Possibility of memorising up to 30 transmitters

- in Mode I: Up - Stop - Down - Man present down
- in Mode II: Step-by-Step - Up stop - Down stop - Stop - Man present down - Man present up.

Possibility of connecting a pushbutton for wired control with Step-by-Step - Always up - Always down mode.

Can be connected to Nemo and Volo S-Radio climatic sensors.

TECHNICAL SPECIFICATIONS

Code	Description	Pc/Pack
TT2N	Radio receiver and control unit to control one 230 Vac motor	1

Code	**TT2N**
Power supply (Vac/Hz)	120 or 230 Vac, 50/60 Hz; (limits 100 - 255 V)
Maximum motor power	500 VA per Vn = 230 V, 600 VA per Vn = 120 V
Protection level (IP)	20
Manoeuvre duration (sec)	4-240 (default about 150 s)
Levels Wind sensor (Km/h)	5, 10, 15, 30, 45 Volo S-Radio
Levels Sun sensor (KLux)	2, 5, 10, 20, 40 + self-Irn. Volo S-Radio
Programmable functions (Mode I)	Up - Stop - Down - Man present down
Programmable functions (Mode II)	Step-by-step - Up stop - Down stop - Stop - Man present down - Man present up
Operating temperature (°C Min/Max)	-20 ÷ +55
Dimensions (mm)	40x18x32
Weight (g)	20
TAG SERIES RADIO RECEIVER	**TT2N**
Frequency (MHz)	433,92
Radio compatibility with	Era, NiceWay
Range transmitters and climatic sensors	Estimated 150 m in open space, 20 m indoors

KOVOPOLOTOVARY.CZ

Nice

TT2Z

Radio receiver and recessed control unit to control motors and lights

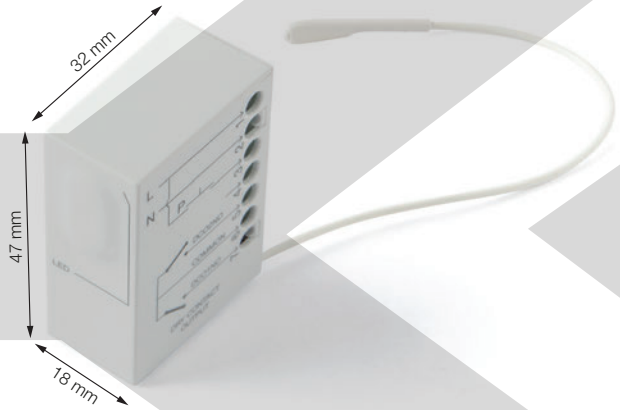

Miniaturised radio receiver and recessed control unit to manage awnings, blinds, rolling shutters and other electrical loads via potential free output.

With Nice transmitters, the TT2Z lets you manage:

- **dry contact controlled motors**;
- **tubular motors with 4-wire power cable and absorption of less than 1A**;
- **two independent switches, for example, to control two lights**.

Possibility of memorising up to 30 Nice transmitters, including three climatic sensors.

If the transmitter has a slider, this can be used to control manoeuvres in “man present” mode.

Personalisation: The desired motor manoeuvre time can be set from a minimum of 10 seconds to a maximum of 4 minutes.

The stop command can be set in three different modes, thanks to the configurable dry contact.

Comfort: Three standard configurations for managing the climatic sensors: for indoor blackout screens, for rolling shutters and for outdoor awnings or blinds.

Sensor management is customisable.

Safety: When active, the Memory Locking function prevents memorising of further transmitters.

Easy quick programming: thanks to the PRG and ESC keys on Era P and Era W series transmitters. The **LED indicator** helps the user follow the correct programming procedure.

TECHNICAL SPECIFICATIONS

Code	Description	Pc/Pack
TT2Z	Radio receiver and control unit for dry contact controlled motors, four-wire motors and lights	1

Code	**TT2Z**
Power supply (Vac/Hz)	90-265 / 50-60
Absorbed power in stand-by (W)	< 0.3
Protection level (IP)	20
Manoeuvre duration (sec)	10 ÷ 240 s
Operating temperature (°C Min/Max)	-20 ÷ +55
Dimensions (mm)	47x18x32
Weight (g)	30
Frequency (MHz)	433,92
Radio coding	FLO-R, O-CODE, F-CODE

KOVOPLOTOVARY.CZ

Nice

TT2L / TT2D

Radio receiver and recessed control units to control lighting systems

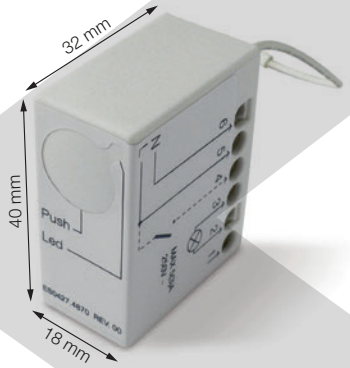

Miniaturised recessed radio receivers and control units compatible with Nice transmitters in the Era and NiceWay series.

To control loads at 230 Vac mains voltage with power up to 1000W / 500 VA.

Protection class IP 20

Quick easy programming: thanks to the dedicated pushbutton.

An **LED indicator** helps the user follow the correct programming procedure, for example indicating when the set thresholds of the climatic sensor are exceeded.

Possibility of memorising up to 30 transmitters

- in Mode I: On - Off
- in Mode II: ON/OFF - Hold to run - Timer1 - Timer2.

Connection to the Volo S-Radio climatic sensor enables lights to be turned on and off by means of the "Sun" sensor.

Timer programmable from a minimum of 0.5" to a maximum of about 9 hours; optimised programming procedure, maintenance of set values even during power failure.

Possibility of connecting a switch for wired control in ON/OFF mode.

TT2L, radio receiver and control unit for lighting systems.

Simplified electrical connection: thanks to the switch connected directly to the power supply.

TT2D, radio receiver and control unit to control lighting installations from a number of points, with built-in switching module.

TECHNICAL SPECIFICATIONS

Code	Description	Pc/Pack
TT2L	Radio receiver and control unit to control 230 Vaclighting systems	1
TT2D	Radio receiver and control unit to control 230 Vaclighting systems with built-in switching module	1

Code	TT2L	TT2D
Power supply (Vac/Hz)	120 or 230 Vac, 50/60 Hz; (limits 100 - 255 V)	
Maximum motor power	1000 W / 500 VA per Vn = 230 V, 600 W / 600 VA per Vn = 120 V	
Protection level (IP)	20	
Manoeuvre duration (sec)	1 s - 9 h (default TIMER1= 1 min, TIMER2= 10 min)	
Levels Sun sensor (KLux)	5, 10, 15, 30, 45 Volo S-Radio	
Programmable functions (Mode I)	On - Off	
Programmable functions (Mode II)	On - Off - Man present - Timer1 - Timer2	
Operating temperature (°C Min/Max)	-20 ÷ +55	
Dimensions (mm)	40x18x32	
Weight (g)	20	
Frequency (MHz)	433,92	
Radio compatibility with	Era, NiceWay	
Range transmitters and climatic sensors	Estimated 150 m in open space, 20 m indoors	

KOVOPOLOTOVARY.CZ

Nice

TTDMS

Recessed control unit with radio receiver and dimmer

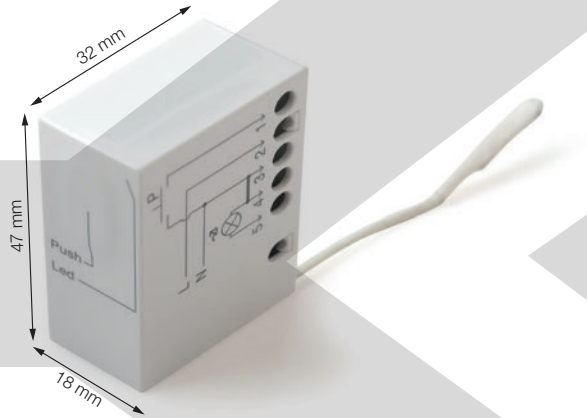

Mains electricity powered lamp dimmer with built-in radio receiver.

For electrical loads up to 250 W.

Possibility of memorising up to 30 transmitters

- in Mode I: Dimmer Up - Toggle - Dimmer Down
- in Mode II: Personalised programming

An external pushbutton can be connected to turn the lamp on and off and adjust light intensity.

Quick easy programming: thanks to the dedicated pushbutton.

An **LED indicator** helps the user follow the correct programming procedure, for example indicating when the set thresholds of the climatic sensor are exceeded.

TECHNICAL SPECIFICATIONS

Code	Description	Pc/Pack
TTDMS	Recessed control unit with built-in radio receiver for electrical loads up to 250 W, on/off and dimmer functions	1

Code	**TTDMS**
Power supply (Vac/Hz)	230 Vac, ±10% 50 Hz
Maximum power of controlled load	250 W / 200 VA
Type of light source (with 230 Vac input power ±1S0%, 50 Hz)	Incandescent, halogen; adjustable: LED and neon
Maximum absorption (excluding absorption of controlled load)	< 500 mW in standby
Protection level (IP)	20
Operating temperature (°C Min/Max)	-20 ÷ +55
Dimensions (mm)	47x18x32
Weight (g)	30

KOVO POLOTOVARY.CZ

Nice

TT1N / TT1V / TT1L

Radio receivers and control units with passthrough installation

Mindy TT1 miniaturised radio
Mindy TT1 miniaturised radio with passthrough installation.

Protection class IP 55.

Built-in 433.92 MHz radio receiver with more than 4.5 million billion combinations.

Self-learning of Era and NiceWay series transmitters and NiceWay Sensor, Nemo, Nemo Vibe, and Volo S-Radio climatic sensors.

Possibility of memorising up to 30 transmitters.

With internal terminal board.

TT1N for awnings and rolling shutters

For motors up to 500 W.

Manages Nemo and Volo S-Radio Manages Nemo and Volo S-Radio commands.

- Mode I: Up - Stop - Down;
- Mode II: Step-by-step - Up only - Down only - Stop.

Manages Nemo and Volo S-Radio Manages Nemo and Volo S-Radio commands.

Operating time can be programmed from a minimum of 4 seconds to a maximum of 4 minutes.

TT1V for Venetian blinds

Pressing and holding the transmitter for less than 2 seconds activates the motor for the duration of the command only, adjusting the slant of the Venetian blind.

Pressing for more than two seconds activates the full opening/closing manoeuvre.

Maximum flexibility in controlling the motor with 2 transmitter memorisation modes:

- Mode I: Up - Stop - Down;
- Mode II: Step-by-step - Up only - Down only - Stop.

Manages Nemo and Volo S-Radio Manages Nemo and Volo S-Radio commands.

Operating time can be programmed from a minimum of 4 seconds to a maximum of 4 minutes.

TT1L for lighting and irrigation systems

To control loads at 230 Vac voltage with power up to 500 W.

Controls a max. of 2 timers for automatic turn-off.

Maximum control flexibility with 2 transmitter memorisation modes:

- Mode I: On - Off with separate keys;
- Mode II: On - Off - Man Present - Timer.

Timer can be programmed from a minimum of 0.5” to a maximum of about 9 hours.

TECHNICAL SPECIFICATIONS

Code	Description
TT1N	433.92 MHz frequency receiver, rolling code. To control motors up to 500 W
TT1V	433.92 MHz frequency receiver, rolling code. For Venetian blinds. To control motors up to 500 W
TT1L	433.92 MHz frequency receiver, rolling code. To control loads at 230 Vac mains voltage with power up to 500 W

Code	TT1N	TT1V	TT1L
Power supply (Vac/Hz)	230/50		
Maximum motor power	500 W / 400 VA		
Protection level (IP)	55		
Manoeuvre duration (sec)	Prog. 4-250		Timer1 Timer2 from 0.5” to 540’
Levels Wind sensor (Km/h)	5, 10, 15, 30, 45 Volo S-Radio		-
Levels Sun sensor (KLux)	2, 5, 10, 20, 40 + self-learning Volo S-Radio		-
Programmable functions (Mode I)	Up - Stop - Down		-
Programmable functions (Mode II)	Step-by-step - Up only - Down only - Stop		On - Off - Man present Timer1 - Timer2
Operating temperature (°C Min/Max)	-20 ÷ +55		
Dimensions (mm)	98x26x20		
Weight (g)	45		
TAG SERIES RADIO RECEIVER	**TT1N**	**TT1V**	**TT1L**
Frequency (MHz)	433,92		
Radio compatibility with	Era, NiceWay		
Range transmitters and climatic sensors	Estimated 200 m in open space, 35 m indoors		

KOVO POLOTOVARY.CZ

Nice

NEW

Nice Pass

DIN module for access control

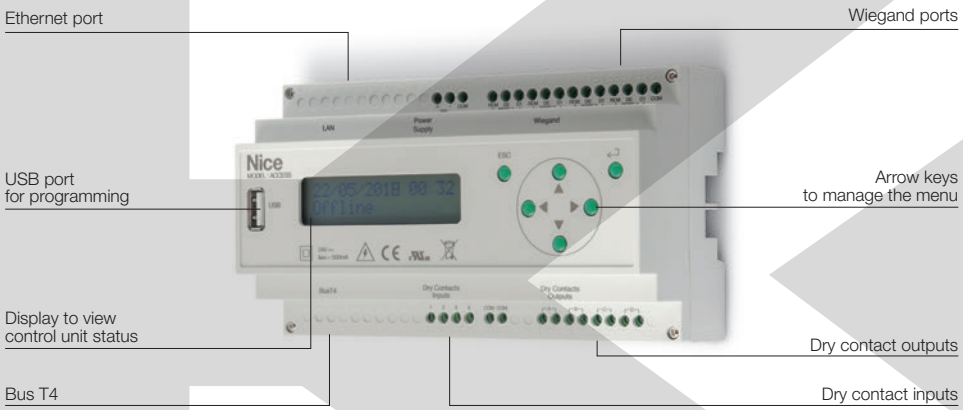

DIN module for access control with BusT4 output, 4 Wiegand ports, 4 dry contact inputs used as input contacts and 4 used as output contacts, ethernet port.

Nice Pass is the access control conceived for buildings with multiple entrances, such as blocks of flats, commercial areas and public spaces.

With Nice Pass, at any moment the administrator user can view who is in the building, the date and time of each entry or exit, confirmed and denied accesses and the status of each associated automation. If necessary, the system administrator can also block one or more users, preventing them from entering the building or area.

The system is supplied with **default settings, so can be used immediately if a standard configuration is adopted**. It can also be programmed if necessary.

Advanced programming The system can be programmed using any web browser (Chrome, Explorer, Firefox, etc.). Products with different technologies can be connected, such as RFID, 433/868 MHz radio, potential free contact inputs and BusT4. The BusT4 output allows numerous Nice automations to be managed, while the Wiegand ports enable third-party devices to be connected. Up to 2000 radio channels can be memorised.

Advanced management Accessing the web area enables definition of areas, buildings and apartments, establishment of user access constraints and authorisations and definition of the access points and devices to be used. It also provides useful information, such as active and non-active users and those present on-site, number of accesses, accesses allowed/not allowed, details of the users who have had access to the controlled area, access date and time and access point used.

TECHNICAL SPECIFICATIONS

Code	Description	Pc/Pack
ACNPS01	DIN module for NicePass access control	1

Code	**ACNPS01**
ELECTRICAL DATA	
Power supply (Vdc)	24
Absorption (A)	200 mA MAX
RADIO RECEIVER	
Frequency (MHz)	433.92
Encoding	ROLLING CODE 52 BIT FLOR
Local receiver range	3 m MAX
Signal cable length (input, output, Wiegand)	300 m MAX
Users	5000 MAX
Log	100,000 MAX
OUTPUTS	
Outputs	250 Vac 10A MAX
Inputs	DRY CONTACT
Ethernet port	10/100 Mbps
CHARACTERISTICS	
Protection level (IP)	20
Operating temperature (°C Min/Max)	0 °C ÷ +40°C
Dimensions (mm)	157,5x89,2x55,3
Weight (g)	400

DIMENSIONS

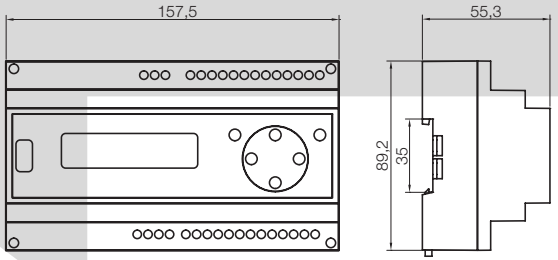

COMMON ACCESSORIES

ETWI
Interface with Wiegand 26303437 protocol for use with a radio control device with Nice Pass.

Pc./Pack 1

KOVOKLOTOVARY.CZ

Simple management via web

The complete and intuitive Nice Pass user interface integrates a web platform the administrator can access easily from a PC or other mobile device, both locally and remotely.

The platform displays detailed information on accesses, users and associated automations. The administrator can also modify system settings at any moment.

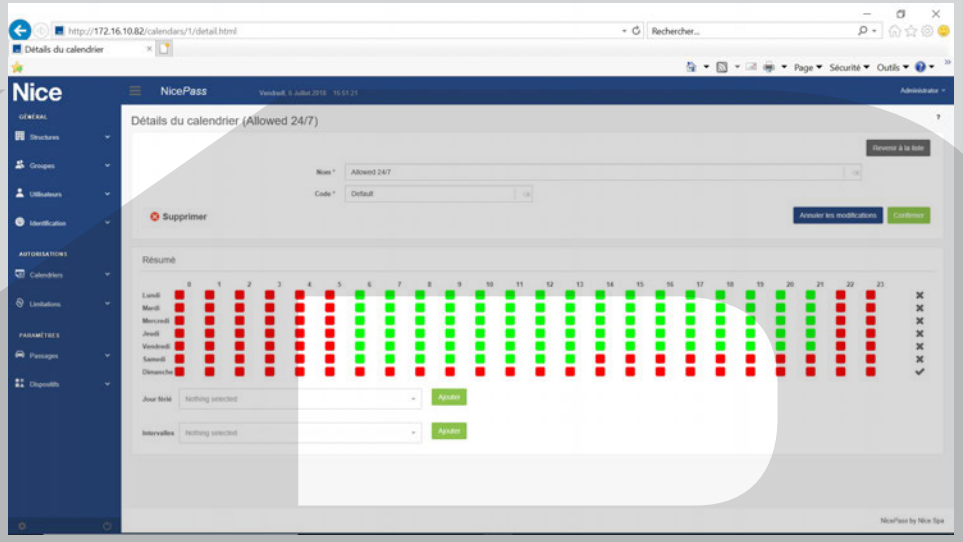

2. Calendar management enables access to be restricted at individual user or user group level according to a predefined calendar.

For example, the administrator can prevent the access of a group of users during weekends and holidays, or create ad hoc calendars.

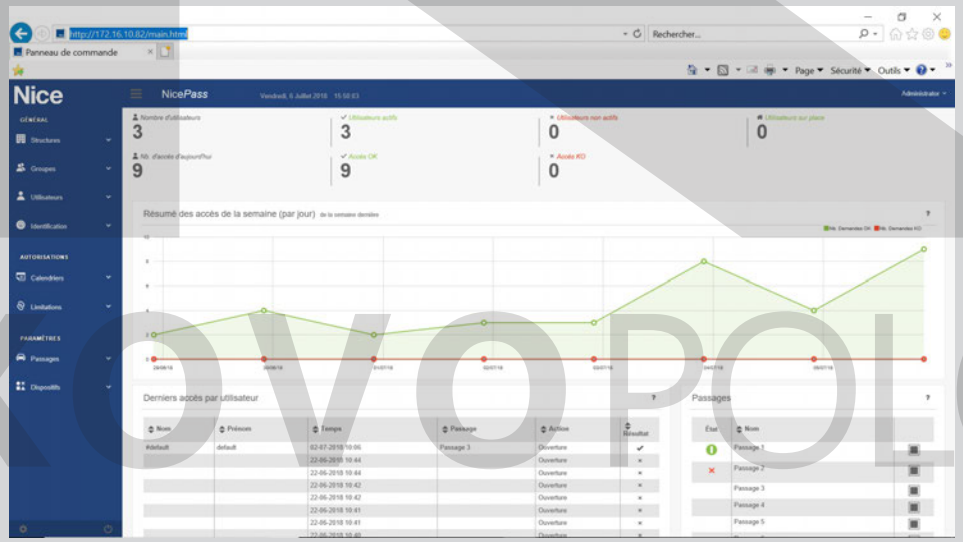

1. The main dashboard displayed on the home page provides the administrator with statistics on the number of users and number of accesses taking place in a given period of time.

The system also provides information on users and respective access times.

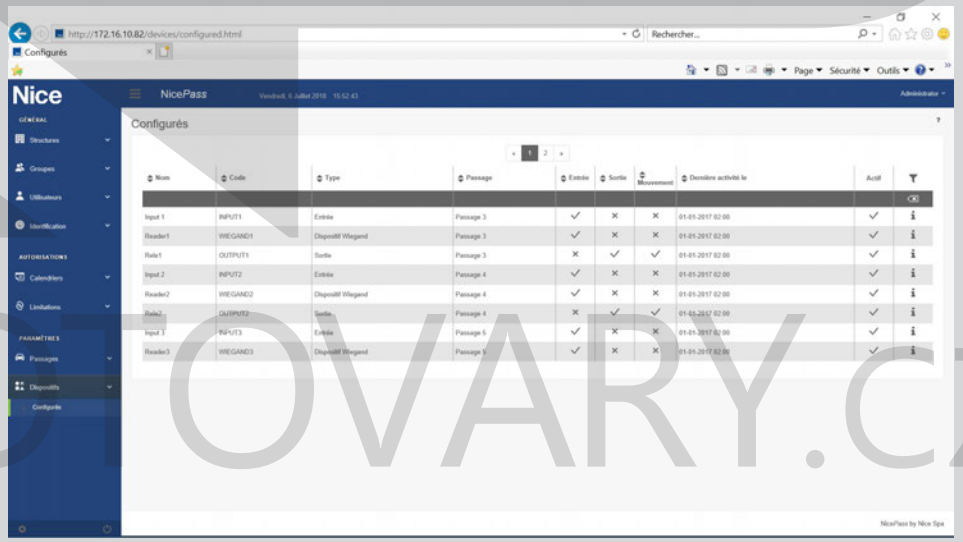

3. The administrator can configure the system architecture completely, by simply selecting inputs and outputs, combining devices and creating areas.

KOVOPLOTOVARY.CZ

Nice Pass, residential example

Access and remote control management in blocks of flats, a typical situation with a number of automations and a considerable number of people with access to communal and private areas according to their profile.

Efficient management NicePass enables administrators of a block of flats or concierges to manage accesses easily and directly: They can easily grant or revoke access for one or more users and the associated control devices, or group them as residents, maintenance staff and guests according to their profile. Area or time restrictions can be created for each of the different group levels.

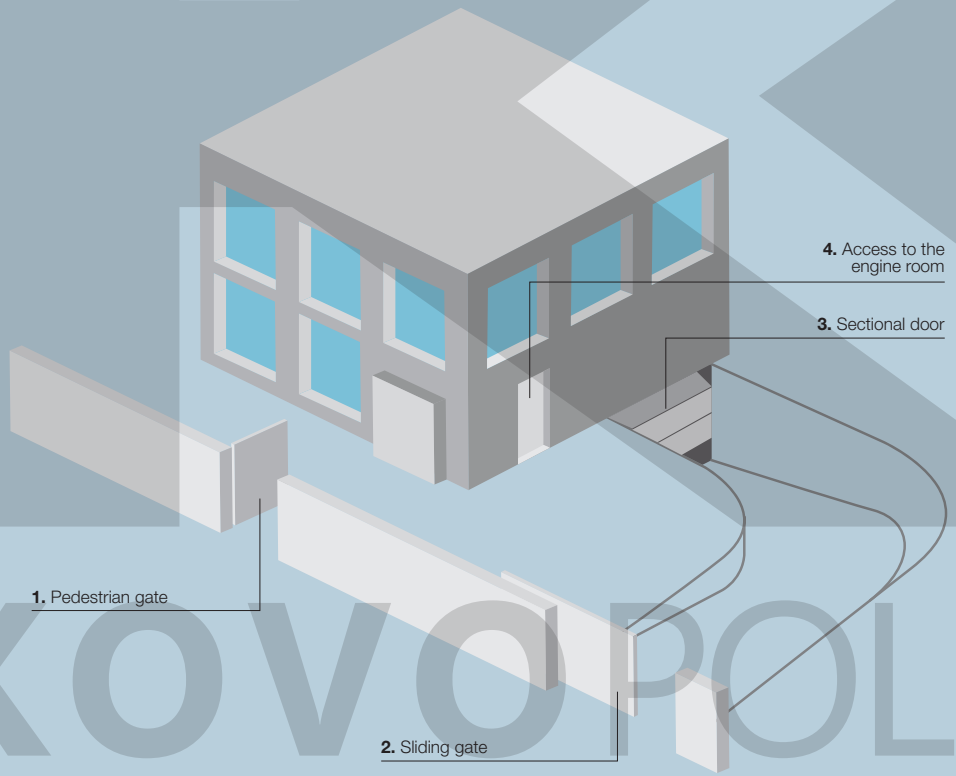

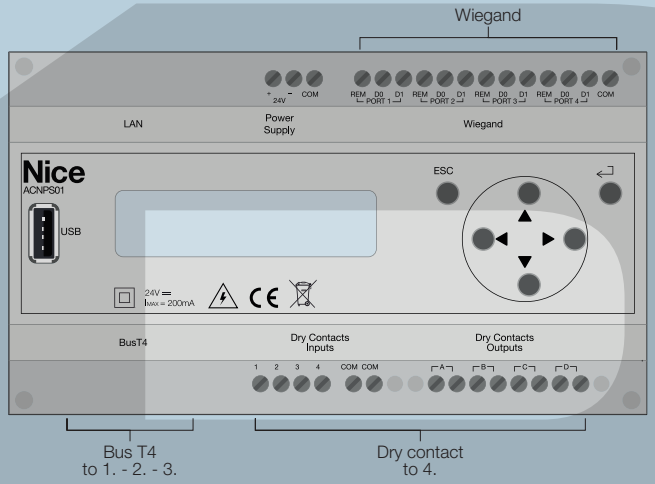

EXAMPLE OF USER MANAGEMENT

GROUP	USER	1. PEDESTRIAN GATE	2. SLIDING GATE	3. GARAGE DOOR	4. PLANT ROOM
MAINTENANCE OPERATIVES	Gardeners	Weekdays 09:00 - 13:00		-	
	Plumber	07:00 - 23:00	-		07:00 - 23:00
	Electrician	07:00 - 23:00	-		07:00 - 23:00
RESIDENTS	Flat 1	24/7			
	Flat 2	24/7			
	Flat 3	24/7			
	Flat 4	24/7			

Example of applications in a residential context.

KOVOPOLOTOVARY.CZ

Nice Pass, car park example

Management of the automations delimiting a car park and the devices controlling access to a private or company car park.

NicePass enables the administrator user to restrict access to a car park to enabled users only, according to the access criteria defined at user or group level. The date and time of each entrance or exit is recorded.

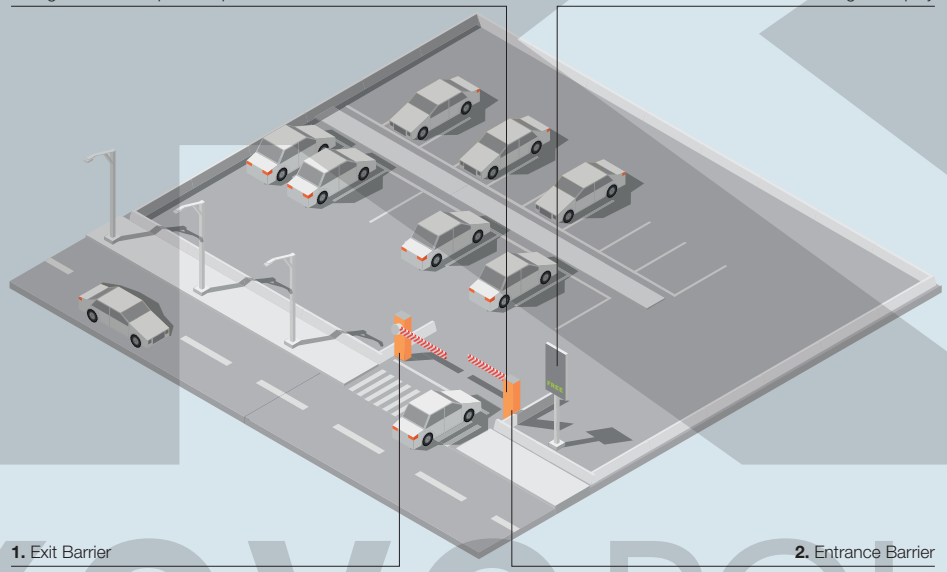

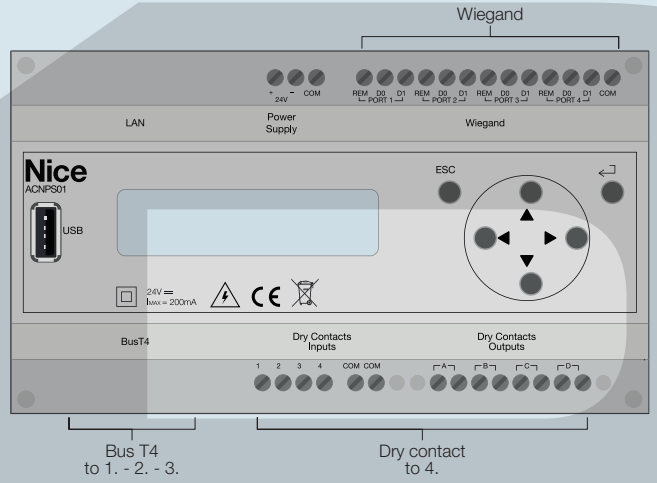

EXAMPLE OF USER MANAGEMENT

GROUP	USER	ACCESS TO CAR PARK
EMPLOYEES	Morning shift	05:00 - 15:00
	Afternoon shift	13:00 - 23:00
	Night shift	21:00 - 07:00
Security personnel	Surveillance	24/7

Example of applications in a commercial context.

KOVOPOLOTOVARY.CZ

1 2 3 A
4 5 6 B
7 8 9 C
0
Nice

Accessories

System of photocells, key-operated and digital selector switches, transponder readers and controlling entries

212. The range
214. Era Photocell S
216. Era Photocell M
218. Era Photocell L
220. Era Keypad
221. Era Keypad wireless
222. Era Key switch
223. Era Transponder reader
224. Era Post

Flashing lights

226. Era Light
227. Wallyght

Wireless accessory system

228. Nice Solemyo Air Net System

Photocells and safety devices

232. Nice&Safe
234. FT210
235. F210

Key-operated selector

236. Kio
236. Kiomini

Heating device

237.

Integrated software management

238. TTPCI

KOVOPOLOTOVARY.CZ

Nice Era photocells, selectors & proximity reader

The Nice generation of optical devices for automation safety, available with Nice BlueBUS technology for a simplified installation

Three different sizes of photocells synchronized to meet any need and complete the safety and comfort of every automation system, also in the tightest spaces, perfect for use with renovations to cover annoying existing set-ups.

> SLIM

With only 30 mm width, also in burglar-proof version, ideal for tight spaces.

> MEDIUM

In anti-intrusion, reflective, wireless and positionable versions, ideal for the most common systems.

> LARGE

Positionable, also in versions for recessed mounting with 9 mm projection, ideal for concealed installations.

KOVOPOLOTOVARY.CZ

> ERA KEYPAD

Extremely strong metal body, 27 millimetres depth and only 13 mm from the wall for the recessed mounting version.

DIGITAL SELECTOR WIRELESS (EDSWG)

Digital selector in burglar-resistant version 13 keys.

DIGITAL SELECTORS (EDS)

Digital selector in burglar-resistant version for outdoor and recessed installation.

> ERA KEY

Wafer thin, only 13 millimetres depth from the wall in the recessed versions.

KEY SELECTORS WITH EUROPEAN CYLINDER (EKSU)

Key selectors in version for outdoor or recessed mounting.

KEY SELECTORS WITH STANDARD CYLINDER (EKS)

Key selectors in version for outdoor or recessed mounting.

> ERA TRANSPONDER READER

Transponder proximity reader for cards and badges with customized programming.

PROXIMITY READERS (ETP)

Proximity readers for card and badge reading.

Transponder BADGE

Convenient transponder badge with a practical through hole to add the key chain on.

KOVOPOLOTOVARY.CZ

Nice

Era Photocell S

Fixed, synchronized photocells Slim, also with Nice BlueBUS technology

Safe: D type device according to specification EN12453 which allows to pick-up obstacles on the optical axis between transmitter (TX) and receiver (RX).

Using the fototest function it is possible to achieve class 2 safety fault according to specification EN 954-1.

Antiglare circuit which eliminates possible sunlight interference.

Practical: 8° angle of reception.

Resistant and vandal-proof: ABS body resistant to weather conditions, available also in burglar-resistant version with metal shell.

Nice BlueBUS technology: available with the Blue-BUS system, which allows an easy connection to the control unit of all devices with only two wires, by simply connecting them in parallel and selecting the jumpers for addressing according to the needed function. The system acquires automatically the devices connected to the BlueBus network.

Automatic synchronization between multiple photocell pairs in order to avoid other possible interferences between the devices.

IB interface: allows the connection of proximity readers with Nice BlueBUS technology to control units having terminals for traditional contacts.

EPS
EPSB

EPSA
EPSAB

KOVOPOLOTOVARY.CZ

PHOTOCELLS

Code	Description	Pc/Pack
EPS	Pair of outdoor photocells Slim	1
EPSA	Pair of outdoor photocells Slim, burglar-resistant metal body	1

PHOTOCELLS WITH NICE BLUEBUS TECHNOLOGY

Code	Description	Pc/Pack
EPSB	Pair of outdoor photocells Slim, for connections via Nice BlueBUS network	1
EPSAB	Pair of outdoor photocells Slim, for connections via Nice BlueBUS network, burglar-resistant metal body	1
IB	Interface for photocell BlueBus connection to non prepared stations	1

TECHNICAL SPECIFICATIONS

	Estimated range (m)	Power supply	Absorption (mA)	Protection level (IP)	Operating temperature (°C Min/Max)	Relay range	Dimensions (mm)	Weight (g)
EPS	15	24 Vac/Vdc limits: 18-35 Vdc, 15-28 Vac	25 RX, 30 TX	44	-20 ÷ +50	max 500 mA and 48 V	30x27x106 h	120
EPSA							31x28x108 h	440

TECHNICAL SPECIFICATIONS WITH NICE BLUEBUS TECHNOLOGY

	Estimated range (m)	Electric power supply output	Protection level (IP)	Operating temperature (°C Min/Max)	Dimensions (mm)	Weight (g)
EPSB	up to 15 for offset maximum TX-RX ± 5 (the device can signal an obstacle also in adverse weather conditions)	the devices can be connected only to "BlueBUS" networks from which it receives the power supply and transmits the output signals	44	-20 ÷ +50	30x27x106 h	120
EPSAB					31x28x108 h	440

	Power supply	Absorption with power pack 24 Vdc	Absorption with power pack 24 Vac	Output BlueBUS	Protection level (IP)	Operating temperature (°C Min/Max)	Dimensions (mm)	Weight (g)
IB	16 ÷ 35 Vdc 18 ÷ 28 Vac	50 mA (add approx. 50 mA for each photocell pair)	44 mA (add approx. 40 mA for each photocell pair)	with a load of max 9 BlueBUS units	30	-20 ÷ +50	86x58x22 h	72

IB

KOVOPOLOTOVARY.CZ

BLUEBUS

Era Photocell M

Synchronized photocells Medium, fixed or positionable, also with Nice BlueBUS technology

Available in anti-intrusion, reflective and wireless versions.

Safe: D type device according to specification EN12453 which allows to pick-up obstacles on the optical axis between transmitter (TX) and receiver (RX).

Using the fototest function it is possible to achieve class 2 safety fault according to specification EN 954-1.

Antiglare circuit which eliminates possible sunlight interference.

Fast easy installation: the wireless technology (EPMOW) eliminates the need to wire the photocells to the control unit and provide routing and cable ducts. The devices interface with the control unit through an ultra-compact dedicated module (IBW) which can be housed directly in the motor or the control unit if separate. Up to 7 devices with Nice BlueBUS technology can be connected to the same IBW interface.

Thanks to the reflective technology (EPMOR), just the main photocell needs to be wired and not the reflective mirror, saving time.

Built in LED light in the EPMOR version: the optional ELMM LED light module can be installed in the EPMOR photocell to light the transit area, act as a flashing light or provide diagnostic information.

Universal system: EPMOR has a relay output for connection to any new or existing automation system.

Simplified maintenance: EPMOW photocells have a diagnostic LED which indicates possible anomalies and battery status, facilitating installation and maintenance.

Practical: 10° angle of reception. The positionable versions allow for the compensation of centering gaps up to 30°.

Resistant and vandal-proof: ABS body resistant to weather conditions, available also in burglar-resistant version with metal shell.

Nice BlueBUS technology: available with the BlueBUS system, which allows an easy connection to the control unit of all devices with only two wires, by simply connecting them in parallel and selecting the jumpers for addressing according to the needed function. The system acquires automatically the devices connected to the BlueBus network.

Automatic synchronization between multiple photocell pairs in order to avoid other possible interferences between the devices.

EPM
EPMB

EPMO
EPMOB

EPMA
EPMAB

EPMAO
EPMAOB

EPMOW

EPMOR

KOVOPOLOTOVARY.CZ

PHOTOCELLS

Code	Description	Pc/Pack
EPM	Pair of outdoor photocells	1
EPMO	Pair of outdoor photocells, 30° positionable	1

PHOTOCELLS WITH NICE BLUEBUS TECHNOLOGY

Code	Description	Pc/Pack
EPMB	Pair of outdoor photocells, for connections via Nice BlueBUS network	1
EPMOB	Pair of outdoor photocells, 30° positionable, for connections via Nice BlueBUS network	1

WIRELESS PHOTOCELLS WITH BLUEBUS TECHNOLOGY

Code	Description	Pc/Pack
EPMOW	Pair of self-synchronised surface-mounted wireless photocells	1

PHOTOCELLS WITH REFLECTIVE TECHNOLOGY

Code	Description	Pc/Pack
EPMOR	Surface-mounted reflective photocell + reflective mirror	1

PHOTOCELLS - BURGLAR-RESISTANT METAL BODY

Code	Description	Pc/Pack
EPMA	Pair of outdoor photocells, burglar-resistant metal body	1

PHOTOCELLS - BURGLAR-RESISTANT METAL BODY WITH NICE BLUEBUS TECHNOLOGY

Code	Description	Pc/Pack
EPMAB	Pair of outdoor photocells, for connections via Nice BlueBUS network, burglar-resistant metal body	1

PHOTOCELLS - POSITIONABLE BURGLAR-RESISTANT METAL BODY

Code	Description	Pc/Pack
EPMAO	Pair of outdoor photocells, 30° positionable	1

PHOTOCELLS - BURGLAR-RESISTANT POSITIONABLE METAL BODY WITH NICE BLUEBUS TECHNOLOGY

Code	Description	Pc/Pack
EPMAOB	Pair of outdoor photocells, 30° positionable, for connections via Nice BlueBUS network	1

TECHNICAL SPECIFICATIONS

	Estimated range (m)	Power supply	Absorption (mA)	Photocell adjustability	Protection level (IP)	Operating temperature (°C Min/Max)	Relay range	Dimensions (mm)	Weight (g)
EPM	15 (30 with jumper + "10" cut)	without jumper 24 Vac/ Vdc limits: 18-35 Vdc, 15-28 Vac with 12 Vac/Vdc jumper limits: 10-18 Vdc, 9-15 Vac	25 RX, 30 TX	-	44	-20 ÷ +50	max 500 mA and 48 V	50x29x80 h	140
EPMO				30° approx. on the all axes				50x38x80 h	160
EPMA				-				50x31x80 h	480
EPMAO				30° approx. on the all axes				50x38x80 h	530
EPMOR	8 (maximum range in optimum conditions 15)	12-24 V	50	approx. 10° on all axes				50x40x105 h	83

TECHNICAL SPECIFICATIONS WITH NICE BLUEBUS TECHNOLOGY

	Estimated range (m)	Electric power supply output	Photocell adjustability	Protection level (IP)	Operating temperature (°C Min/Max)	Dimensions (mm)	Weight (g)
EPMB	up to 15 for offset maximum TX-RX ± 5 (the device can signal an obstacle also in adverse weather conditions)	the devices can be connected only to "BlueBUS" networks from which it receives the power supply and transmits the output signals	-	44	-20 ÷ +55	50x29x80 h	140
EPMOB			30° approx. on the all axes			50x38x80 h	160
EPMAB			-			50x31x80 h	480
EPMAOB			30° approx. on the all axes			50x38x80 h	530
EPMOW	20 (maximum range in optimum conditions 40)	3 V DC, with CR123 lithium battery	approx. 10° on the vertical axis			50x40x105 h	200

	Power supply	Absorption with power pack 24 Vdc	Absorption with power pack 24 Vac	Output BlueBUS	Protection level (IP)	Operating temperature (°C Min/Max)	Dimensions (mm)	Weight (g)
IB	16 ÷ 35 Vdc 18 ÷ 28 Vac	50 mA (add approx. 50 mA for each photocell pair)	44 mA (add approx. 40 mA for each photocell pair)	with a load of max 9 BlueBUS units	30	-20 ÷ +50	86x58x22 h	72

	Power supply	Output BlueBUS	Protection level (IP)	Operating temperature (°C Min/Max)	Dimensions (mm)	Weight (g)
IBW	by connection to the "BlueBUS" terminal of the automation control unit.	one with a max. load of 20 BlueBUS units	30	-20 ÷ +70	18 x 33 x 40 h	25

	Power supply	Absorbed power (W)	Protection level (IP)	Operating temperature (°C Min/Max)	Dimensions (mm)	Weight (g)
ELMM	12-24 V	1	45	-20 ÷ +55	40 x 30 x 25 h	20

ACCESSORIES

Code	Description	Pc/Pack
IB	Interface for photocell BlueBus connection to non prepared stations	1
IBW	Interface through EPMOW and control units with Nice BlueBUS technology	1
ELMM	LED light module for EPMOR	1
POE	Wall support for Era photocells	1

IB **ELMM** **POE**

KOVOPOLOTOVARY.CZ

Nice

BLUEBUS

Era Photocell L

Synchronized photocells Large, fixed or positionable, also with Nice BlueBUS technology, both surface mounted and recessed

Easy and versatile: recessed versions EPLIO compatible with the most popular standards on the market to replace the old photocells or cover annoying existing setups without the need of extra adaptors.

Safe: D type device according to specification EN12453 which allows to pick-up obstacles on the optical axis between transmitter (TX) and receiver (RX).

Using the fototest function it is possible to achieve class 2 safety fault according to specification EN 954-1.

The models EPL, EPLO, EPLIO provide for 2 range levels.

Antiglare circuit which eliminates possible sunlight interference.

The positionable versions allow for the compensation of centering gaps up to 30°.

Discreet: polycarbonate body, extremely strong with minimal projection of 9 millimetres from the wall for the recessed mounting version.

Pratical: adapter bowl EKA03 to simplify useful preparations for recessed mounting.

Nice BlueBUS technology: all versions with the BlueBUS system allow an easy connection to the control unit of all devices with only two wires, by simply connecting them in parallel and selecting the jumpers for addressing according to the needed function.

The system automatically acquires the devices connected to the BlueBus network and allows automatic synchronization with multiple photocells in order to avoid other possible interferences.

IB interface: allows the connection of photocells with Nice BlueBUS technology to control units having terminals for traditional contacts.

KOVOPOLOVARY.CZ

EPL
EPLB

EPLO
EPLOB

EPLIO
EPLIOB

PHOTOCELLS

Code	Description	Pc/Pack
EPL	Pair of surface-mounted photocells Large	1

PHOTOCELLS WITH NICE BLUEBUS TECHNOLOGY

Code	Description	Pc/Pack
EPLB	Pair of surface-mounted photocells Large, for connections via Nice BlueBUS	1

POSITIONABLE PHOTOCELLS

Code	Description	Pc/Pack
EPLO	Pair of surface-mounted photocells Large, 30° positionable	1

POSITIONABLE PHOTOCELLS, WITH NICE BLUEBUS TECHNOLOGY

Code	Description	Pc/Pack
EPLOB	Pair of surface-mounted photocells Large, 30° positionable, for connections via Nice BlueBUS	1

POSITIONABLE PHOTOCELLS, FOR RECESSED MOUNTING

Code	Description	Pc/Pack
EPLIO	Pair of photocells Large for recessed mounting, 30° positionable	1

SWIVEL PHOTOCELLS, FOR RECESSED MOUNTING WITH NICE BLUEBUS TECHNOLOGY

Code	Description	Pc/Pack
EPLIOB	Pair of photocells Large for recessed mounting, 30° positionable, for connection via Nice BlueBUS	1

TECHNICAL SPECIFICATIONS

	Estimated range (m)	Power supply	Photocell adjustability	Absorption (mA)	Protection level (IP)	Operating temperature (°C Min/Max)	Relay range	Dimensions (mm)	Weight (g)
EPL	15 (30 with jumper + "10" cut)	without jumper 24 Vac/ Vdc limits: 18-35 Vdc, 15-28 Vac with 12 Vac/Vdc jumper limits: 10-18 Vdc, 9-15 Vac	-	25 RX, 30 TX	44	-20 ÷ +50	max 500 mA and 48 V	70x30x70 h	160
EPLO			30° approx. on the all axes					70x38x70 h	180
EPLIO								70x66+9x70 h	185

TECHNICAL SPECIFICATIONS WITH NICE BLUEBUS TECHNOLOGY

	Estimated range (m)	Electric power supply output	Photocell adjustability	Protection level (IP)	Operating temperature (°C Min/Max)	Dimensions (mm)	Weight (g)
EPLB	up to 15 for offset maximum TX-RX ± 5 (the device can signal an obstacle also in adverse weather conditions)	the devices can be connected only to "BlueBUS" networks from which it receives the power supply and transmits the output signals	-	44	-20 ÷ +50	70x30x70 h	140
EPLOB			30° approx. on the all axes			70x38x70 h	160
EPLIOB						70x66+9x70 h	185

	Power supply	Absorption with power pack 24 Vdc	Absorption with power pack 24 Vac	Output BlueBUS	Protection level (IP)	Operating temperature (°C Min/Max)	Dimensions (mm)	Weight (g)
IB	16 ÷ 35 Vdc 18 ÷ 28 Vac	50 mA (add approx. 50 mA for each photocell pair)	44 mA (add approx. 40 mA for each photocell pair)	with a load of max 9 BlueBUS units	30	-20 ÷ +50	86x58x22 h	72

ACCESSORIES

Code	Description	Pc/Pack
IB	Interface for photocell BlueBus connection to non prepared stations	1
EKA03	Bowl for recessed mounting (depth 66 mm) for installation of EKSI, EKSIEU. also compatible with EPLIO, EPLIOB, EDSI, EDSIB	50
POE	Wall support for Era photocells	1

IB

POE

KOVOPOLOTOVARY.CZ

Nice

Era Keypad

12 key digital selector, also with Nice BlueBUS technology, available in the recessed mounting version

EDS
EDSB

EDSI
EDSIB

Wafer-thin: extremely strong metal body, 27 millimetres depth and only 13 mm from the wall for the recessed mounting version.

Safe: the combination is a 1 to 9 digit number, this allows the generation of 999,999,999 possible combinations!

Backlit keypad.

Easy programming:

- 2 programming modes: Easy or Professional;
- possibility to program the number of uses of a specific combination;
- 255 storable combinations expandable, on EDS and EDSI up to 510 combinations with a second additional memory BM1000.

With a O-Box interface you can manage easily any kind of programming of the BM1000 memory, in proximity of the system or also at a distance, directly from the office of the installer.

O-Box is interfaced with the PC, thus allowing an orderly storing of all installations.

Nice BlueBUS technology: vailable with BlueBUS system which allows an easy connection to the control unit of all devices with only two wires, by simply connecting them in parallel and other exclusive functions:

- 2 keys for the activation of two different commands chosen among 6 available ones (for example, step operation, close, open), depending on the control unit to which they are connected to;
- up to 4 control devices EDSB/EDSIB and ETPB which can be connected also with a mixed configuration;
- possibility of insertion of a block/unblock function.

Two different visual signalling depending on the state of automation:

- red: when the automation is closed or is closing;
- green: during opening operation or in the case in which the “automation block” function is active.

DIGITAL SELECTORS

Code	Description	Pc/Pack
EDS	Digital selector, 12 keys, to be combined with the MORX decoder	1
EDSI	Digital selector, 12 keys, for recessed mounting, to be combined with the MORX decoder	1
MORX	Decoder for 1 ETP or up to 4 EDS/EDSI connected in parallel, with 1 BM1000 memory for 255 combinations	1

TECHNICAL SPECIFICATIONS

	Protection level (IP)	Dimensions (mm)	Weight (g)
EDS	44	70x27x70 h	200
EDSI	54	70x66+13x70 h	160

	Storage capacity	Range relè	Power supply	Maximum absorption	Protection level (IP)	Operating temperature (°C Min/Max)	Dimensions (mm)	Weight (g)
MORX	2 BM1000 for max. 510 combinations or 510 MOCARD, MOCARDP and HSB1	max. 500 mA and 48 Vac/Vdc	10 ÷ 35 Vdc, 12 ÷ 28 Vac	24 Vdc=70 mA 24 Vac=200 mA 12 Vdc=150 mA 12 Vac=300 mA with 1 ETP or up to 4 EDS/EDSI	30	-20 ÷ +70	98x42x25 h	65

MORX

DIGITAL SELECTORS WITH NICE BLUEBUS TECHNOLOGY

Code	Description	Pc/Pack
EDSB	12 key digital selectors with Nice BlueBUS technology burglar-resistant metal body	1
EDSIB	12 key digital selectors with Nice BlueBUS technology, for recessed mounting burglar-resistant metal body	1

TECHNICAL SPECIFICATIONS WITH NICE BLUEBUS TECHNOLOGY

	Power supply	Absorption	Protection level (IP)	Dimensions (mm)	Weight (g)
EDSB	via BlueBUS	1.5 BlueBUS units	44	70x27x70 h	200
EDSIB			54	70x66+13x70 h	160

AUXILIARY EQUIPMENT FOR RECESSED MOUNTING VERSIONS

Code	Description	Pc/Pack
EKA03	Bowl for recessed mounting (depth 66 mm) for installation of EKSI, EKSIEU. also compatible with EPLIO, EPLIOB, EDSI, EDSIB	50
EKA02	Finishing kit for EDSI, EDSIB, EKSI, EKSIEU installation	10

KOVOPOLOTOVARY.cz

Nice

Era Keypad wireless

13 key digital selectors, with radio connection, 100% wireless

Digital radio selector with FloR 52 bit coding: is compatible with FloR with rolling code and generates 4.5 trillions of combinations, self-learning.

Complete: 3 transmission channels to control 3 automated systems or 3 different customized commands for the single automated system.

Convenient: no cabling needed and an estimated range of 25 m in free space and 15 m inside buildings.

Backlit keypad in poor light conditions.

Acoustic feedback.

Safe: the combination is a 1 to 9 digit number, this allows the generation of 999,999,999 possible combinations!

Economic: extremely reduced consumption, transmission is activated at the pressure of a key and turns off automatically.

The ambient light sensor activates lighting of the keyboard only when this is necessary.

Thin: extremely strong metal body, only 27 millimetre depth.

DIGITAL WIRELESS SELECTOR

Code	Description	Pc/Pack
EDSWG	Digital switch via radio compatible with Flor three-channel receivers, three passwords	1

TECHNICAL SPECIFICATIONS

	Power supply	Battery life	Frequency	Radiated power	Radio coding	Operating temperature (°C Min/Max)	No. of digits combination	Estimated range (m)	Protection level (IP)	Dimensions (mm)	Weight (g)
EDSWG	6 Vdc with 2 lithium batteries type CR2430	estimated 2 years with 10 transmissions per day	433.92 MHz ± 100 KH	< 1 mW e.r.p.	rolling code 52 bit FloR	-10° ÷ +55°	from 0 to 8	25 in open space, 15 indoors	54	70x27x70 h	200

KOVOPOLOTOVARY.CZ

Nice

Era Key switch

Key selectors for outdoor and recessed installation with automatic return lock, European or standard cylinder

EKSEU

EKSIEU

EKS

EKSI

Selectors in burglar-resistant version with metal shell.

Wafer thin: only 13 millimetres depth from the wall in the recessed versions (32 and 45 millimetres in the outdoor versions).

Electrical contacts and levers protected by plastic container.

Employable as direct motor command in applications with mains power source (230 Vac).

Flexible solution: recessed versions with bowl supplied, for new installations or existing setups with adaptor EKA02.

KEY SELECTORS

Code	Description	Pc/Pack
EKSEU	Key selector Era series, European cylinder, for outdoor installation	1
EKSIEU	Key selector Era series, European cylinder, for recessed mounting	1
EKS	Key selector Era series, for outdoor installation	1
EKSI	Key selector Era series, for recessed mounting	1

ACCESSORIES

Code	Description	Pc/Pack
CHS	Neutral key for EKS, EKSI	1
CHEU	Neutral key for EKSEU, EKSIEU	1
EKA03	Bowl for recessed mounting (depth 66 mm) for installation of EKSI, EKSIEU. also compatible with EPLIO, EPLIOB, EDSI, EDSIB	50
EKA02	Finishing kit for EDSI, EDSIB, EKSI, EKSIEU installation	10

TECHNICAL SPECIFICATIONS

	Contact range	Protection level (IP)	Dimensions (mm)	Weight (g)
EKSEU	10 (2) A - 250 Vac	44	70x43x70 h	490
EKSIEU			70x66+13x70 h	530
EKS			70x32x70 h	360
EKSI			70x66+13x70 h	450

KOVOPLOTOVARY.CZ

Nice

Era Transponder reader

Transponder proximity reader for cards and badges, bimodal transmitters Flor-m, also with Nice BlueBUS technology

ETP

MOCARD
MOCARDP

HSB1

Easy programming:

- 2 programming modes: Easy or Professional;
- allows you to determine which cards/badges are enabled on the system;
- possibility of programming the number of uses available to a specific card or badge;
- 255 storable cards/badges expandable, on ETP, up to 510 cards/badges with a second additional memory BM1000;
- 2 modes (static and dynamic) to activate two different commands (ETP version).

With a O-Box interface you can manage easily any kind of programming of the BM1000 memory, in proximity of the system or also at a distance, directly from the office of the installer.

O-Box is interfaced with the PC, thus allowing an orderly storing of all installations.

Nice BlueBUS technology: available with BlueBUS (ETPB) system which allows an easy connection to the control unit of all devices with only two wires, by simply connecting them in parallel and other exclusive functions:

- 2 modes (static and dynamic) for the activation of two different commands chosen among 6 available ones (for example, step operation, close, open), depending on the control unit to which they are connected to;
- possibility of insertion of a block/unblock function;
- up to 4 control devices EDSB/EDSIB and ETPB which can be connected via BlueBUS, also with a mixed configuration.

Transponder badge HSB1 Practical in use, can be added to the key chain so as to be always available.

PROXIMITY READER

Code	Description	Pc/Pack
ETP	Proximity reader for transponder cards MOCARD and MOCARDP to be combined with the MORX decoder	1
MORX	Decoder for 1 ETP or up to 4 EDS/EDSI connected in parallel, with 1 BM1000 memory for 255 combinations	1
BM1000	Additional memory for additional 255 combinations	5

PROXIMITY READER WITH NICE BLUEBUS TECHNOLOGY

Code	Description	Pc/Pack
ETPB	Proximity reader for transponder cards with Nice BlueBUS technology	1

ACCESSORIES

Code	Description	Pc/Pack
MOCARD	Transponder card programmable via O-Box	10
MOCARDP	Transponder card programmable via O-Box, with sequential coding for multiple entry	10
HSB1	Transponder badge newly programmable via O-Box, with sequential coding for multiple entry	10

TECHNICAL SPECIFICATIONS

	Description	Acquisition distance (cm)	Protection level (IP)	Dimensions (mm)	Weight (g)
ETP	MOCARD, MOCARDP and HSB1 reader	3 ÷ 6	54	70x26x70 h	265

	Storage capacity	Range relè	Power supply	Maximum absorption	Protection level (IP)	Operating temperature (°C Min/Max)	Dimensions (mm)	Weight (g)
MORX	2 BM1000 for max. 510 MOCARD and MOCARDP or combination	max. 500 mA and 48 Vac/Vdc	10 ÷ 35 Vdc 12 ÷ 28 Vac	24 Vdc=70 mA 24 Vac=200 mA 12 Vdc=150 mA 12 Vac=300 mA (with 1 MOM or 4 MOT)	30	-20 ÷ +55	98x42x25 h	65

MORX

TECHNICAL SPECIFICATIONS WITH NICE BLUEBUS TECHNOLOGY

	Power supply	Absorption	Acquisition distance (cm)	Protection level (IP)	Dimensions (mm)	Weight (g)
ETPB	via BlueBUS	2 BlueBUS units	up to 4	54	70x26x70 h	270

KOVOPOLOTOVARY.CZ

Nice

Era Post

Outdoor aluminium posts for photocells, selectors and proximity readers, with height 500 mm and 1000 mm

Modern design: New post line for the installation of medium and large sized photocells.

Easy to install: simplified installation for the setting in absolute freedom of one's own safety area.

Code	EPW/EPMB	EPWO/EPWOB	EPWOR	EPWOW	EPL/EPLB	EPLO/EPLOB	PHW**	EDS/EDSB	EDW	ETP/ETPB	EKS	EKSEU
PPH1	•	•			•	•	•					
PPH2	•	•			•	•		•*	•*	•*	•*	•*
PPH3	•	•										
PPH4	•	•										
PPK								•	•	•	•	•

* The installation requires the EKA01 plug adaptor.
** The installation of the solar photocell requires the PHWA1 plug adaptor.

KOVOPOLOTOVARY.CZ

Code	Description	Pc/Pack
PPH1	Aluminium column with protected housing for 1 photocell, medium and large size, 500 mm h	2
PPH2	Aluminium column with protected housing for 1 photocell, medium and large size, 1000 mm h	2
PPH3	Aluminium post with protected housing for 1 photocell Medium, 500 mm h	2
PPH4	Aluminium post with protected housing for 1 photocell Medium, 1000 mm h	2
PPK	Aluminium post with housing for 1 selector 1100 mm h	2
EKA01	Plug for mounting of EKS, EKSEU, EDS, EDSB, EDSWG, ETP, ETPB, on PPH2 post	1

PPH3 **PPH1** **PPH4** **PPH2** **PPK**

KOVOPOLOTOVARY.CZ

Nice

Era Light

Flashing LED signal light

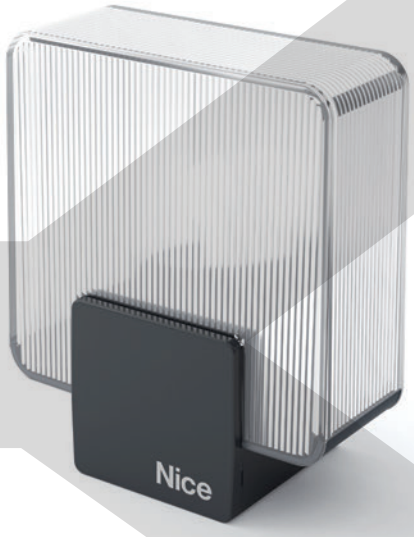

Universal: The flashing light is available in two versions: 90-240 Vac and 12-36 Vdc.

Thanks to the wide range of power supplies, ELAC is compatible with different electrical standards and can also be installed in areas at risk of voltage surges.

Practical: body particularly shock resistant, designed for fixing in various positions.

Energy saving: Thanks to the LED technology, ELAC and ELDC consume about 80% less than traditional flashing lights.

All versions have a built-in 433.92 MHz antenna.

Protection class IP44.

TECHNICAL SPECIFICATIONS

Code	Description	Pc/Pack
ELAC	Neutral, LED light, 90-240 Vac, for compatible control units	1
ELDC	Neutral, LED light, 12-36 Vdc, for compatible control units	1

Code	**ELAC**	**ELDC**
TECHNICAL SPECIFICATIONS		
Power supply	90-240 Vac, 50/60 Hz	12-36 Vdc
Maximum absorption* (mA)	36	230
Maximum power* (W)	5	5,6
Bulb	white LED	
Internal flashing light	Yes	
PERFORMANCE DATA		
Max. operating cycle	33% (5s ton, 10s toff)	50% (5s ton, 5s toff)
DIMENSIONAL AND GENERAL DATA		
Protection level (IP)	44	
Working temp. (°C Min/Max)	-20 ÷ +50	
Dimensions (mm)	132x72x155	

* Consumption measured with LED always on.

TABLE OF FLASHING LIGHT/CONTROL UNIT COMPATIBILITY

Code	MC200	DPRO500	MC800	A924	MC824H	MC424L	WALKY	HYKE	ROAD	ROBUS	RUN	NAKED SLIDING 400/SLIGHT	TUB	SPY	SPIN / SPINBUS	TEN	SOON	S/M/L BAR	WIDE
ELAC	•	•	•										•						
ELDC				•	•	•	•	•	•	•	•	•		•	•	•	•	•	•

VERSATILE: CAN BE MOUNTED ON A SURFACE, COLUMN OR WALL

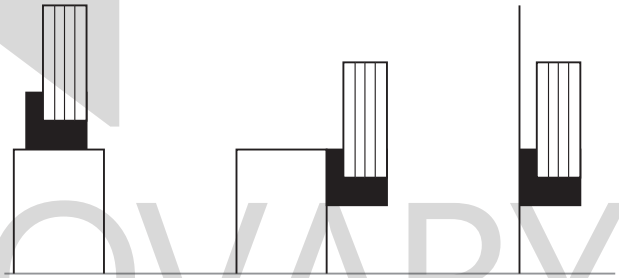

KOVO POLOTOVARY.CZ

Nice

Wallyght

Multi-function LED indicator

The only version with 12/24 Vac/Vdc power supply and flashing light function, courtesy light function or dusk sensor function.

A new idea for improved safety: when connected to compatible control units, Wallyght can act as a normal flashing light, or provide ambient lighting like a fixed courtesy light.

When connected to a 12/24 Vac/Vdc output, Wallyght can remain permanently lit, and also be activated at dusk to then turn off at dawn thanks to the integrated dusk sensor.

Optimal efficiency, extra long life: the two 1 W-LEDs guarantee a lifetime of 70.000 hours (continuous use).

Horizontal, wall or ceiling mounting: combined with the possibility of orienting the light beam and compact dimensions of the IP44 box, use of Wallyght is even more flexible.

TECHNICAL SPECIFICATIONS

Code	Description	Pc/Pack
WLT	Multi-function LED indicator.	1

TABLE OF FLASHING LIGHT/CONTROL UNIT COMPATIBILITY

Code	A924	MC824H	MC424L	WALKY	HYKE	ROAD	ROBUS	RUN	NAKED SLIDING 400/SLIGHT	SPY	SPIN / SPINBUS	TEN	SOON	S/M/L BAR	WIDE
WLT	•	•	•	•	•	•	•	•	•	•	•	•	•	•	•

RECOMMENDED INSTALLATION MODE

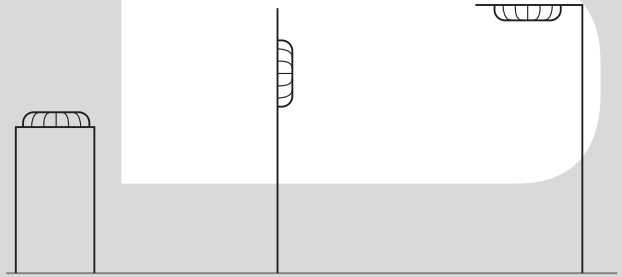

PATH INDICATORS ON ENTRANCE PATHWAYS

COURTESY LIGHT

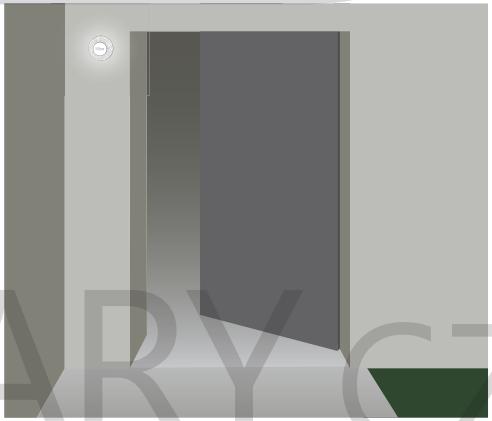

KOVO POLOMARY.CZ

Nice Solemyo Air Net System

Automation safety devices becomes wireless control systems!

Photocells, sensitive edge and flashing lightings all acquire a new function: power is supplied by means of an integral miniature solar panel.

The solar panel powers rechargeable batteries to ensure independent operation of the automation system in any conditions.

Era Light Solemyo
Flashing light

Kit Solemyo
Solar power kit

Era TCW Solemyo
Sensitive edge transmitter

Era Photocell Solemyo
Photocell

Era Post Solemyo
Solemyo Era Photocell Post

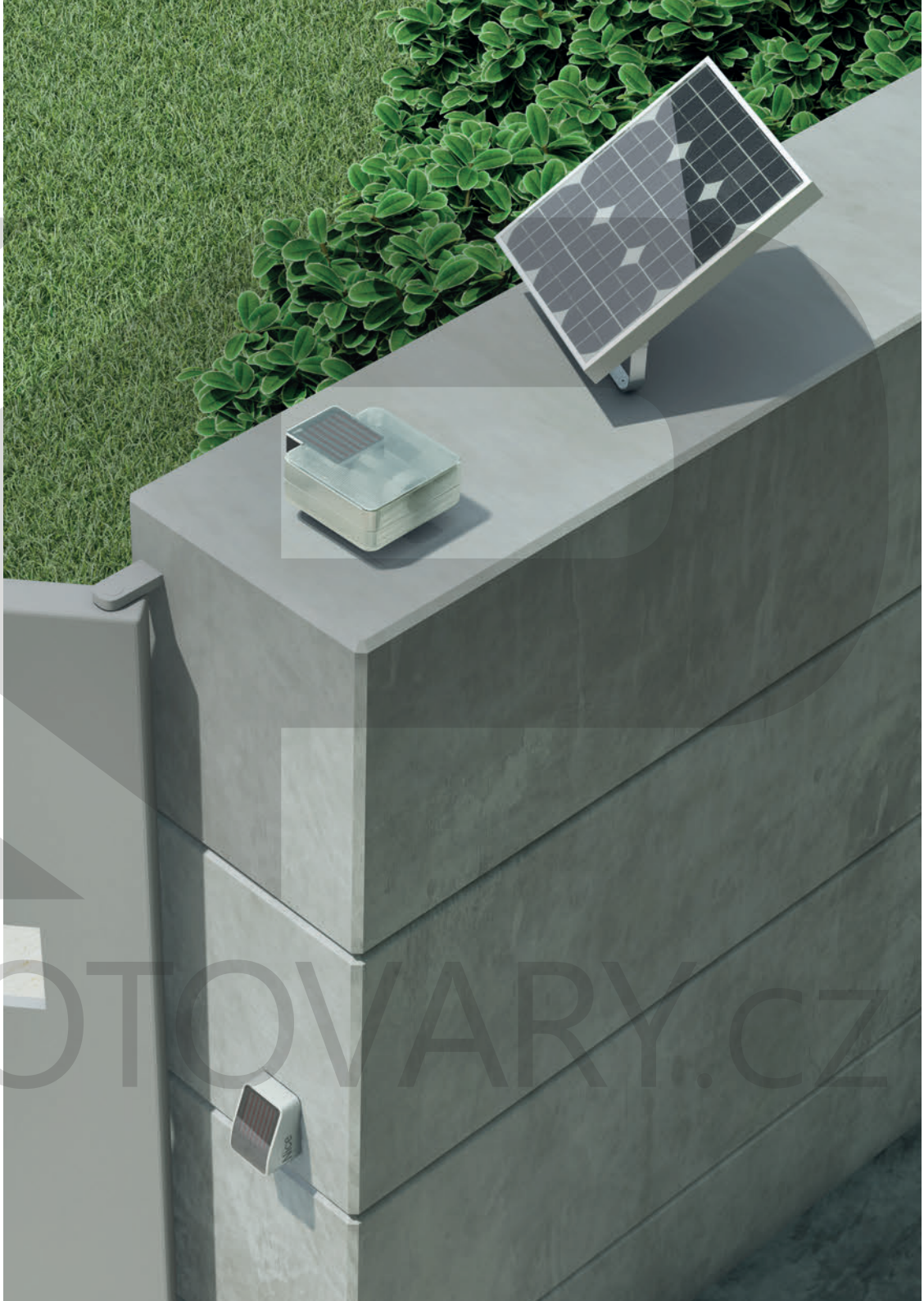

KOVOPOLOTOVARY.CZ

Solemyo

Solar power system for automation systems

PSY24

SYP

Solemyo is the solar power system to automate gates, garage doors and road barriers, even those located far from the electrical mains.

Solemyo is available both in kit version and single products.

Installable anywhere: without the need for connections or excavations, even in the most remote locations or those difficult to access with the power mains.

Increased savings and respect for the environment: thanks to solar energy, free and clean: an ecological and intelligent choice with short term benefits.

Low consumption with no risk of blackouts: the extended duration of the energy reserve, combined with the low consumption of the automations, guarantee operation also in prolonged overcast conditions.

Less consumption, more autonomous operation!

Perfect operation ensured even at night time or in prolonged overcast conditions, guaranteeing comfort and safety.

Ease of use: the SYA1 auxiliary power supply unit enables rapid battery charging via a 230 Vac power mains, as an alternative to the photovoltaic module.

Battery charge status Led indicators.

Installation advice: if two or more parallel-connected solar panels have to be installed, purchase individually the items that make up the Solemyo system to increase the system's charging capacity or use just one SYA1 transformer to charge several PSY24 battery boxes.

The kit contains:

SYP: photovoltaic panel for 24 V supply.

PSY24: 24 V battery box with control circuit and carry handles. It stores the electrical energy produced by the SYP panel, with continuous and permanent supply throughout the day.

Cables and connectors necessary for the connection.

TECHNICAL SPECIFICATIONS

Code	Description	Pack/Pallet
SYKCE	Solar power kit comprising SYP photovoltaic panel and PSY24 battery box with charging control circuit	21
SYP	Photovoltaic panel for 24 V supply with maximum power 15 W	
SYP30	Photovoltaic panel for 24 V supply with maximum power 30 W	
PSY24	24 V battery box with control circuit and carry handles	

The SYP30 photovoltaic panel

Sold individually, is ideal in all the situations with low exposure to the sun or automations with high intensity of use.

Code	PSY24	SYP30	SYP	SYA1
Power supply (Vac 50/60 Hz)		-		110 ÷ 240
Rated voltage (V)		24		-
Maximum current (A)	10		-	
Peak power (Wp)	-	30	15	-
Maximum power (W)		-		60
Rated battery capacity (Ah)	20		-	
Protection level (IP)	44		-	
Working temp. (°C Min/Max)	-20 ÷ +50*	-40 ÷ +85		0 ÷ +40
Complete recharging time (hours)	~ 15**		-	
Dimensions (mm)	235x170x258 h	450x25x550 h	390x28x415 h	132x58x30 h
Weight (kg)	14	3,5	1,9	0,345

* 0 ÷ 40 if recharged from the power mains with SYA1 power supply unit.
** Using the power supply unit via the mains.

INSTALLATION DIAGRAM

Flexible: Solemyo adapts perfectly to all types of installation.

ACCESSORIES

SYA1
Power supply unit for charging the battery PSY24 from the supply mains.

Pc./Pack 1

KOVOPOLOTOVARY.CZ

Nice

Nice Solemyo Air Net System

LLW

PHW

PHWA1

PPH1

So many benefits!

Quick installation: no need to lay wiring to connect the accessories to the control unit, drilling holes or laying raceways: just position them as appropriate and let the control unit identify them.

Devices interface with the control unit by means of a special, very compact interface module that can be fitted directly inside the motor, or the control unit, if separate.

Better appearance, flexible positioning of devices over time: it is very easy to add (or remove) devices, with no need to search for a mains connection point or a contact for series connection.

Extremely reliable transmission: the radio system allows two-way communication - each device does not just respond to the control unit's instructions but sends a feedback signal, confirming that it is present and operational, and it also signals the occurrence of events such as the passage of an object between the two photocells.

Operating frequency: 868 MHz, less liable to interference.

Two separate channels are used, for a 100% guarantee of the system's operation and safety even in case of sudden interference.

Intelligent system: it detects whether any interference is from another Nice wireless automation unit. In this case, the "new" automation system just installed selects two communication channels different from those used by the existing system, keeping the two systems' channels separate.

Each device has LEDs in the bottom indicating the signal quality and troublefree operation of the system, which can be checked immediately in the event of malfunction or at first start-up.

A LED flashes when the device is receiving enough solar power to allow recharging.

Solemyo Era Photocell

Pair of PHW two-way wireless photocells, bidirectional, with power supply by photovoltaic cells.

Easy to install: the receiver photocell has a special LED that indicates the degree of alignment with the transmitter photocell, very useful during initial installation.

Solemyo Era Light

Wireless LLW flashing light, with extremely high-efficiency: LEDs lower consumption and virtually unlimited lifetime (no more blown lamps needing frequent changing).

Light output adapts to ambient conditions to ensure good visibility even in direct sunlight and to save energy during the hours of darkness.

Can be used as flashing signal or courtesy light.

COMPATIBILITY/INTERFACE TABLE

Code	Description	Pc/Pack
PHW	Pair of wireless photocells with built-in photovoltaic panel	1
PPH1	PHW photocell post, h. 50 cm	2
PHWA1	Pair of adapters for PHW on PPH1 posts	1
LLW	Wireless flashing light with built-in photovoltaic panel	1
IBW	Interface between PHW/LLW and control units with BlueBUS system	1

Code	PHW	LLW	TCW1	TCW2
Control units with BlueBUS system (*)	With IBW	With IBW	With IBW (**)	With IBW (**)
Control units without BlueBUS system	Not possible	Not possible	With IRW	With IRW

* There may be any limitations on the number of devices managed.
** Not managed in automation for swing gates (MC824H; Walky; Hopp, Hyke) and in some automations for garage doors (SN6020*; SN6021*; SPIN2*; SPIN20*; SPIN21*; SPOK).

KOVOPROLOTOVARY.CZ

Nice

Era TCW

Sensitive edge sensors

TCW2

TCW1

Even safer automation thanks to the Nice Solemyo Air Net System's new sensitive edge sensors.

No connection, totally wireless, powered by the sun.

Energy saving: thanks to the solar power cell built into the TCW2, with rechargeable batteries.

Version with battery-only operation is also available in case of installations with low exposure to sunlight.

Maximum safety: thanks to the "wireless" system for detection and communication between sensitive edge, interface and control unit, allowing swift action when an obstacle is detected.

Fast easy installation: maximum flexibility in installing the devices. Possibility of connection to 8.2 KOhm resistive sensitive edges.

State-of-the-art technology: IBW interfaces, for Nice BlueBUS-compatible control units, and IRW, interfaces, for control units without BlueBUS connection, allow radio communication with TCW sensors.

Suitable for any architectural context

Compact size: 99x49x33.

INSTALLATION DIAGRAM

* IBW or IRW depending on the motor (only IBW accepts also PHW and LLW)

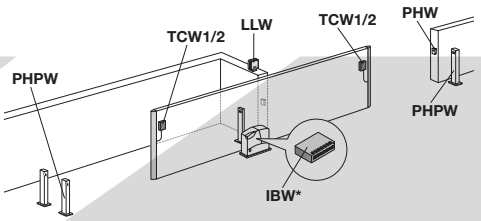

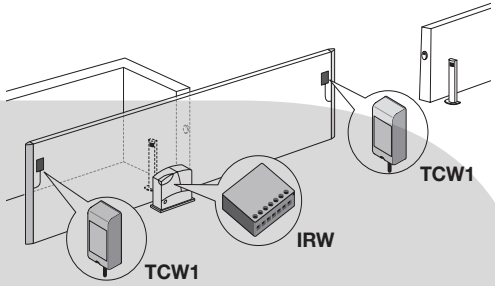

TCW + IBW

The IBW is connected to the control unit's BlueBUS terminal and communicates with the TCW by radio. Compatible also with PHW wireless photocell and LLW wireless flashing light.

TCW + IRW

IRW is connected to safety input (Stop and Photo) of control unit and communicates via radio with TCW.

TECHNICAL SPECIFICATIONS

Code	Description	Pc/Pack
TCW1	Battery-powered wireless transmitter for sensitive edges. Suitable for internal use or sparsely sunny areas	1
TCW2	Photovoltaic panel and rechargeable battery-powered wireless transmitter for sensitive edges. Suitable for external use or sunny areas	1
IBW	BlueBUS wireless interface for sensitive edges with wireless transmitter for BlueBUS system control units	1
IRW	Relay wireless interface for sensitive edges with wireless transmitter for control units with classical connections (Stop and Photo)	1

Code	TCW2	TCW1
Technology used	Radio data reception and transmission, with choice of 2 frequencies in the 868 MHz band	
Power supply	Photovoltaic cell with electricity stored in a rechargeable AAA NiMH battery	2 alkaline batteries
Battery life	estimated 4-5 years *	estimated 2-3 years, with 1200 mAh alkaline batteries
Maximum number of operations per day	15 operations lasting no more than 1 minute (1 cycle = opening + closing)	
Sensitive edge (RS) input range	typically 8.2 KOhm	
Radio operating range (max)	20 m (40 m)	
Failsafe category	2 (under EN 945-1 standard) depending on "Fototest" input and output connection type	
Housing protection rating	IP44	
Operating temperature	-20 ÷ +55°C	
Dimensions (mm)	99x49x33	
Weight (g)	130	145

* The estimated values refer to edge activity of about 15 manoeuvres per day, with a complete manoeuvre time of 60 seconds (900 seconds per day).

KOVOPOLOTOVARY.CZ

Nice

Nice&Safe

8.2 KOhm resistive sensitive edges

Maximum safety and control of the automation.

Safer: if there are any faults in the system like, for example, the product itself has broken down, the edges will communicate this to the control unit.

The TCE interface board enables users to connect sensitive edges (with 8.2 KOhm resistance) to those control units which are not equipped with a special input.

The length can be personalised: the components supplied in the kits enable installers to build sensitive edges of the correct dimension.

Practical: they adapt to any kind of situation and can be installed quickly.

Reliable: the new Class3 technology means that the control unit, the sensitive edges are connected to, can understand if the device is functioning correctly, or if it is out of use.

8.2 KOhm analogical-type input.

RESISTIVE SENSITIVE EDGES AND ACCESSORIES

Code	Description	Pc/Pack
TCB65	Sensitive edge in 10 m rolls	1
TCK	Kit putting together 8 sensitive edges complete with: - Terminal caps (TCT65) - Connectors, complete with cable L=250 cm (TCS250) - Connectors 8.2 KOhm (TCER) - Tin of glue (TCC) - Tin of primer (TCP)	 16 8 8 1 1
TCF	Scissors for cutting safety sensitive edges	1
TCA65	Aluminium profile L=200 cm	5
TCE	Control interface for sensitive edge	1

ELECTRICAL CONNECTION DEVICES FOR SAFETY SENSITIVE EDGES ON MOVEABLE LEAFS

Code	Description	Pc/Pack
DBM5	Complete kit for gates up to 5 m	1
DBM7,5	Complete kit for gates up to 7.5 m	1
DBM10	Complete kit for gates up to 10 m	1

INSTRUMENTS AND SOFTWARE FOR FORCE IMPACT MEASUREMENT

Code	Description	Pc/Pack
NSFB	BlueForce Smart instrument for measuring the impact force compliant with EN12445, with Bluetooth/USB interface and Software included, complete with carry case	
NSFS	BlueForce Smart instrument for measuring the impact force compliant with EN12445, with USB interface and software included complete with carry case	
NSEL	Straight extension for measurements from 30 to 50 cm, applicable on NSFB and NSFS	
NSEA	Angular extension for measurements from 1.25 to 2.50 m, applicable on NSEL	

KOVO POLOTOVARY.CZ

TCB65

TCK

TCF

TCA65

TCE

DBM5 - DBM7,5 - DBM10

NSFB - NSFS

Mechanical sensitive edges, more safety and easy installation.

CMA is the pre-assembled, high mechanical edge consisting in aluminium profiles of 1.5 - 1.7 - 2 - 2.5 m in length; ideal for assembly on sliding or swing gates.

CMBK is the kit for installing a low mechanical edge: for edges max. 4 m (CMBK4) and for edges max. 6 m (CMBK6), ideal for garage doors in general, up-and-over and sectional doors.

CB is a protective rubber pad. Fitted to the CMBK4/ CMBK6 kit, it forms the low mechanical edge.

MECHANICAL SENSITIVE EDGES

Code	Description	Pc/Pack
	High mechanical edge with aluminium profiles in sections measuring 1.5 - 1.7 - 2 - 2.5 m in mm 36x75 h:	
CMA 1,5MT	Length 1.5 m	1
CMA 1,7MT	Length 1.7 m	1
CMA 2MT	Length 2 m	1
CMA 2,5MT	Length 2.5 m	1
CB	Protective rubber pad for low rolled mechanical edge and aluminium profiles in sections measuring 2 m; dimensions in mm 23x44 h	40
CMBK4	Kit for installing a low mechanical edge, with aluminium profiles measuring 4 m (to use together with CB)	1
CMBK6	Kit for installing a low mechanical edge, with aluminium profiles measuring 6 m (to use together with CB)	1

PASSIVE SENSITIVE EDGES

Code	Description	Pc/Pack
TCBS60	Passive sensitive edge in 10 m rolls	1

Inductive magnetic detector loop.

The inductive magnetic detector loop system is used to detect vehicles and control vehicle transit in the presence of automated gates and garage doors and road barrier and car park management systems.

Two versions are available, to control one or two magnetic loops.

Even more intuitive programming and use thanks to the simple DIP switch function control.

The user can set the parameters directly on the device. For example, the detection sensitivity of the loop detectors can be adjusted to 4 different levels to meet different installation requirements.

The loop detector can vary the detection signal from continuous to pulsed and the LP22 two loop detector can establish the direction of the vehicle moving over the magnetic loops.

The LEDs on the detectors provide continuous diagnostics.

At regular intervals, the detector can calibrate the parameters essential to correct operation of the system.

Code	Description	Pc/Pack
LP21	Single-channel metal mass detector 24 V power supply	1
LP22	Two-channel metal mass detector 24 V power supply	1

KOVOPOLOTOVARY.CZ

CMA

CB,

TCBS60

LP21

LP22

Nice

BLUEBUS

FT210

Pair of optical devices for sensitive edges

PPH2 PPH1 FA1

Optical device, with wireless transmitter to secure on moveable leaf, horizontally adjustable through 210° and 30° vertically, for an automation according to Standards.

Consideration towards personal safety and product quality.

The safety level of the main edge, required by the EN12453 standard, can be achieved for any “type of use” and any “type of activation” by integrating a FT210/FT210B device to an 8.2 KOhm TCB65 type resistive sensitive edge

The FT210/FT210B device, integrated with a “resistive” sensitive edge (8.2 KOhm), is safe against individual faults (category 3 according to the EN 954-1 standard) or can be used with automated systems with self-diagnosis at the start of every manoeuvre (category 2 according to the EN 954-1 standard).

Additional models

Versions with relay output (FT210), with Nice BlueBUS technology (FT210B), available with 2 Ah (FTA2) and 7 Ah (FTA1) battery Kit, for intensive use.

Cutting-edge technology

The anti-collision circuit avoids interference with other out-of-sink receivers.

The FT210/FT210B optical devices are equipped with a special sensor capable of recognizing when the gate is motionless, which remains in a low consumption mode and activates only when the gate is in motion.

Range adjustable on 2 levels; alignment with proportional LED for easy and safe installation.

Suitable for any architectural environment and easy to install.

Compact size: Reduced dimensions: 46x128x45; electrical connections can also be made from the lower section of the box.

Resilient and safe Polycarbonate casing; FA1 vandal-proof metal shell (optional); low transmitter battery indicator.

TECHNICAL SPECIFICATIONS

Code	Description	Pc/Pack
FT210	Pair of optical devices for sensitive edges fastened on moving door, can be swivelled through 210° with relay output. Battery kit (FTA1/FTA2) compulsory	1
FT210B	Pair of optical devices for sensitive edges fastened on moving door, can be swivelled through 210° with BlueBUS technology. Battery kit (FTA1/FTA2) compulsory	1

	Estimated range (m)	Power supply	Absorption	Protection level (IP)	Working temp. (°C Min/Max)	Relay range	Dimensions (mm)	Weight (g)
FT210	10 (residential), 15 (industrial)	RX: 12-24 Vac/Vdc limits: 18-35 Vdc, 10-28 Vac TX: 3.6 V lithium battery	RX: 120 mA - 12 V, 70 mA - 24 V TX: 20 uA gate not moving, 450 uA gate operating	44	-20 ÷ +55	max 500 mA and 48 V	46x45x128 h	300
FT210B		RX: the device can only be connected to “BlueBUS” networks	1 BlueBUS unit TX: 20 uA gate not moving, 450 uA gate operating			-		280

ACCESSORIES

Code	Description	Pc/Pack
FA1	Vandal-proof metal shell	2
FA2	Bracket for fixing to PPH2 and PPH1 columns	5
FTA1	7 Ah battery kit for FT210/FT210B transmitters, for intensive use	1
FTA2	2 Ah battery kit for FT210/FT210B transmitters	1
PPH2	Aluminium post for 2 photocells, 1000 mm high	2
PPH1	Aluminium post for 1 photocell, 500 mm high	2

GATES

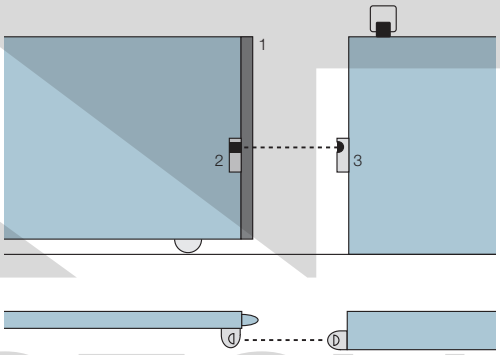

1. TCB65, resistive sensitive edges
2. Tx FT210 power supply with battery
3. Rx FT210

KOVOPLOTOVARY.CZ

Nice

BLUEBUS

F210

Synchronised photocells adjustable

PPH2 PPH1

F210 - FA1

Synchronised photocells horizontally adjustable through 210° and 30° vertically.

Simply perfect installations.

The 210° solution

The beam of the Nice F210 and F210B photocells has a horizontal scope of 210°, thereby increasing the safety level of the system and simplifying installation: the gate or garage door to be automated quite often slide flush with the wall making it very difficult to position the photocell.

Numerous models and countless advantages

The new photocells are available with relay output (F210) or with the Nice BlueBUS technology (F210B).

With the BlueBUS technology, all devices can be easily connected to the control unit with just two wires.

Sensors with the BlueBUS technology can be connected to incompatible control units by means of an IB interface.

The system acquires automatically the devices connected to the BlueBus network.

Suitable for any architectural environment and easy to install.

Compact size: Reduced dimensions: 46x128x45; electrical connections can also be made from the lower section of the box.

Resilient and safe Polycarbonate casing; FA1 vandal-proof metal shell (optional).

Cutting-edge technology The problem of interference between the sensors and the automatic synchronisation between several pairs of photocells is solved by the anti-blinding circuit.

High range adjustable on 2 levels; synchronising circuit; alignment with proportional Led for easy and safe installation.

TECHNICAL SPECIFICATIONS

Code	Description	Pc/Pack
F210	Pair of synchronised photocells adjustable through 210°, with relay output	1
F210B	Pair of synchronised photocells adjustable through 210°, with the Nice BlueBUS technology	1

	Estimated range (m)	Power supply	Absorption	Protection level (IP)	Working temp. (°C Min/Max)	Relay range	Dimensions (mm)	Weight (g)
F210	10 (30 with jumper cut)	without jumper 24 Vac/ Vdc limits: 18-35 Vdc, 15-28 Vac with 12 Vac/Vdc jumper limits: 10-18 Vdc, 9-15 Vac	25 mA RX, 30 mA TX	44	-20 ÷ +55	max 500 mA and 48 V	46x45x128 h	230
F210B		the device can only be connected to "BlueBUS" networks	1 BlueBUS unit			-		

ACCESSORIES

Code	Description	Pc/Pack
IB	Interface for connecting BlueBUS F210B photocells up to control units which have not been manufactured for this purpose	1
FA1	Vandal-proof metal shell	2
FA2	Bracket for fixing to PPH2 and PPH1 columns	5
PPH2	Aluminium post for 2 photocells, 1000 mm high	2
PPH1	Aluminium post for 1 photocell, 500 mm high	2

TECHNICAL SPECIFICATIONS

	Power supply	Absorption with power pack 24 Vdc	Absorption with power pack 24 Vac	Output BlueBUS	Protection level (IP)	Operating temperature (°C Min/Max)	Dimensions (mm)	Weight (g)
IB	16 ÷ 35 Vdc 18 ÷ 28 Vac	50 mA (add approx. 50 mA for each photocell pair)	44 mA (add approx. 40 mA for each photocell pair)	with a load of max 9 BlueBUS units	30	-20 ÷ +55	86x58x22 h	72

IB

FA1

KOVOPOLOTOVARY.CZ

Nice

Kio

Key-operated selector switch for low voltage contacts

With release mechanism for metal cable, ideal for automating sectional doors, rolling doors and folding doors.

User-friendly: Kio is both a key-operated selector switch and a release device. Its design makes it very convenient and effortless to use, and easy to install anywhere thanks to its very narrow outline.

Long-lasting: made from cast aluminium, epoxy-power coated.

Easy: LED allows you to locate the selector switch even in total darkness.

More safety: coded key. Release device activated directly by opening the door or by the winding device.

The very first product to incorporate the key-operated control and release motor functions.

Code	Description	Pc/Pack
KIO	Key-operated selector switch for low voltage contacts, with release mechanism for metal cord	1
KA1	6 m cable release kit for KIO	1

KIO

KA1

Nice

Kiomini

Aluminium key switch

With control button and release mechanism for metal cable.

Practical: Kiomini is both a lever for the release mechanism for metal cord and a control mechanism for the direct or through a control unit activation of a single phase motor.

Resistant: a vandal-proof die-cast aluminium casing. The access to the sector is possible by a thick door with closing key.

Convenient: thanks to its small dimensions, it is easy and compact to install.

Code	Description	Pc/Pack
KIOMINI	Aluminium key switch with control and release mechanism	1
KA1	6 m cable release kit for KIO	1

KA1

KOVOPOLOTOVARY.CZ

Heating device

PW1 heating element for gearmotors:

it maintains a suitable temperature for the automation system to operate correctly, even under the most severe of weather conditions.

Resistor: able to reach temperatures of almost 100°C in standard ambient conditions.

Effective: each element has a consumption of 20 W and is extremely efficient thanks to the silicone sheath that covers the resistance and increases the diffusion of heat.

Indipendent: the device is directly fed by a 230/120 Vac power supply through the TW1 thermostat, and because it doesn't burden the transformer of the product itself, the performance characteristics of the gear motor remain the same.

TW1, regulation thermostat for PW1:

when the detected temperature drops below the set threshold, the thermostat activates the heating element PW1 thereby slowly increasing the internal temperature of the product itself; the heating action is maintained until the detected surrounding temperature stabilizes at the set levels.

Easy to programme: the intervention threshold can be regulated between 0°C and -20°C.

Safe: with key to verify functioning and LED to verify the status of the outputs.

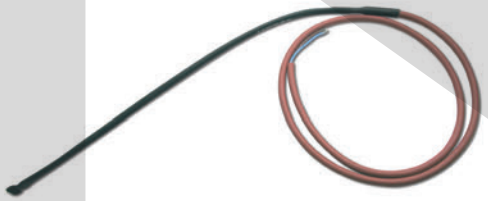

PW1

TW1

Code	Description	Pc/Pack
PW1	Heating element for gearmotors	1
TW1	Regulation thermostat with trimmer	1

KOVOPOLOTOVARY.CZ

Nice

NEW

TTPCI

BusT4 – PC interface

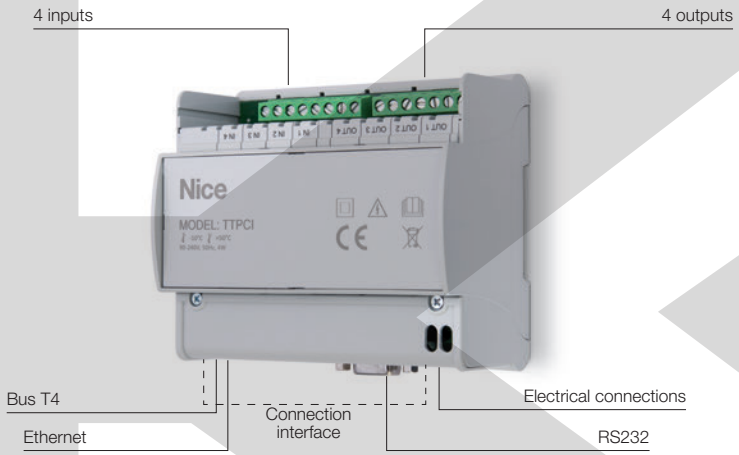

The TTPCI electronic device allows Nice products to be interfaced with other automation systems and controlled by PC.

TTPCI interfaces with the Nice products by BusT4 via the standard communication channel (serial/ethernet), enabling customers to control the automations directly via PC.

Device and automation management The presence of four opto-isolated inputs and four relay outputs allows input signals and electrical loads to be managed, making it possible to create a simple access control system. Mounting inside an electrical panel with DIN rail for anchoring.

Management by PC The device can be connected to a PC with terminal emulator to programme and manage the automations using commands with a specific syntax.

TECHNICAL SPECIFICATIONS

Code	Description	Certificates	Pc/Pack
TTPCI	BusT4 – PC interface	**EC**	1

Code	**TTPCI**
ELECTRICAL DATA	
Power supply (Vac/Hz)	90 / 230 Vac – 50/60Hz
Consumption	4W MAX – 2W Stand by
CONNECTION INTERFACE	
BUS T4	BUS T4, RS232, Ethernet
4 inputs*	Low voltage: 24 Vdc – 2 A
	High voltage: 250 Vac – 2 A
4 outputs*	Low voltage: 12 Vdc / 30 Vdc
	High voltage: 12 Vac / 250 Vac
CHARACTERISTICS	
Protection level (IP)	20
Operating temperature	0 °C ÷ +40°C
Space occupied on DIN rail	6 units
Dimensions (mm)	106x64x87,5 h

* In respect of safety standards, mixed configurations are not allowed.

APPLICATION EXAMPLE

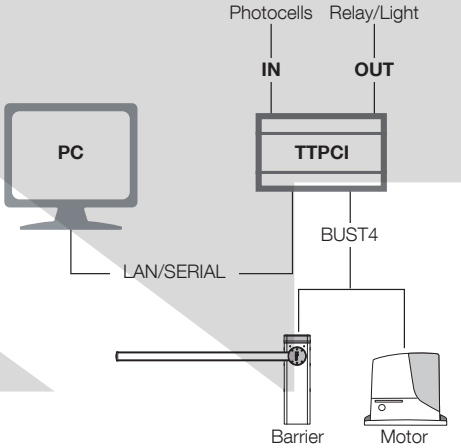

DIMENSIONS

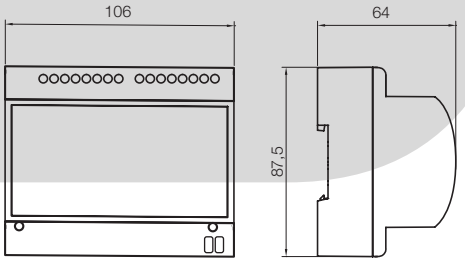

KOVOPOLOTOVARY.CZ

KOVOPOLOTOVÁ

Control units

Selection guide

Control unit for swing gates with one or two motors **Moonclever** pages 242/244

- with encoder, for 24 Vdc motors → with BlueBUS technology, compatible for operation with Solemyo and Opera → **MC824H**
- without encoder, for 24 Vdc motors → compatible for operation with Solemyo and Opera, with built-in radio receiver → **MC424L**
- without encoder, for 230 Vac motors → with BlueBUS technology, compatible for operation with Opera → **MC800**

For rolling doors **MC200** page 245

- for one 230 Vac motor with built-in receiver → with automatic closing feature and flashing light output, compatible for operation with Opera → **MC200**

D-Pro 500 page 246

- three-phase 400 V or three-phase / single-phase 230 Vac motor, 2.2 kW, IP55 case → compatible for operation with Opera → **DPRO500**

D-Pro 924 page 247

- for one motor, with 24 Vdc encoder, built-in battery charger, IP55 case, (only for Sumo) → **DPRO924**

KOVOPOLOTOVARY.CZ

Moonclever

Control units for motors for 24 Vdc swing gates, with magnetic encoder

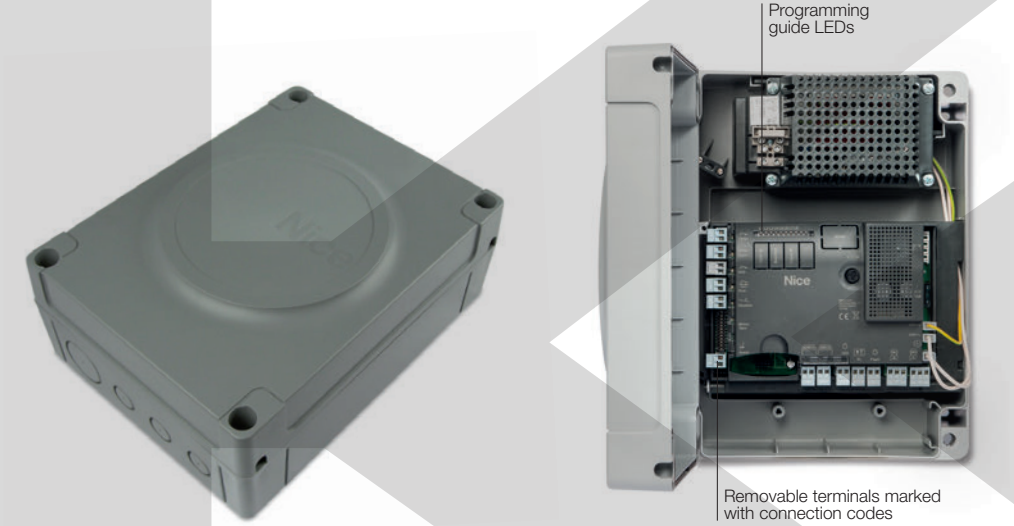

With Nice BlueBUS technology, compatible with the Solemyo solar power kit (MC824H, MC824L) and Opera system for automation management, programming and diagnostics, including remotely.

Compatible with the Opera system whose multifunction O-View display (mountable in the box) enables the system to be personalised, modifying the opening and closing positions, staggered closing of the leafs and decelerations, diversifying the parameters such as force, speed and obstacle sensitivity for each motor.

Microprocessor logic: Moonclever control units combine the advantages of the Opera system with the advanced functions of the Nice systems (gradual start and deceleration, automatic memorising of both limit switch positions and pedestrian pass door function).

Safe and reliable: thanks to obstacle detection with dual technology and monitoring of motor absorption and speed via the encoder, throughout door/gate travel, with provision for connection of latest generation resistive sensitive edges.

Smart: on start-up, indicator to confirm correct power supply and efficient operation of the control unit; automatic fault diagnostics and signalling via the flashing light and confirmation LEDs.

Savings, respect for the environment, and autonomy: when connected to the buffer battery or Solemyo kit (MC824H, MC824L), consumption on standby is reduced to just 0.1 W.

Installation couldn't be simpler: thanks to the system BlueBUS, enabling connection of the control unit, motors and accessories by means of just two wires.

No black out: operation in the event of a power failure by means of optional batteries (PS324) with compartment in control unit.

Radio receiver: designed to take SM plug-in receivers.

Discover the complete range of **BiDirectional products** on page 176.

Discover all the benefits of the **Yubii** system on page 170.

TECHNICAL SPECIFICATIONS

Code	Description	Pc/Pack
MC824H	Control unit for one or two 24 V non-reversible motors with encoder, with Nice BlueBUS technology and provision for Opera and Solemyo	1
MC824L	Control unit for one or two Oltre 1824 motors without encoder, with Nice BlueBUS technology and provision for Opera and Solemyo	1
MC824HR	Control unit for one or two 24 V reversible motors with encoder, with Nice BlueBUS technology and provision for Opera	1

Code	**MC824H, MC824L, MC824HR**
Power supply (Vac 50/60 Hz)	230 ± 10%
Battery power (Vdc)	21 ÷ 28
Maximum motor power (VA; A)	360 (W); 15
Maximum accessories power 24 V (A)	0,2
Maximum flashing light power (V; W)	12; 21
Maximum gate open indicator power CA (V; W)	12; 2
Maximum electric lock power (Vac; VA)	12; 15
Working time "TL" (s)	-
Pause time "TP" (s)	1 ÷ 250
Delay 1st motor in opening TRA (s)	Programmable
Delay 2nd motor in closing TRC (s)	Programmable
Courtesy light time TCOR (s)	0: 250
Pre-flashing time TPRE (s)	0: 10
Force adjustment (%)	-
Anti-crushing device (sensitivity)	min ÷ max
Case dimensions (mm)	230x125x300 h

COMMON ACCESSORIES

IBT4N
Interface for connecting the O-View programming unit.

Pc./Pack 1

IT4WIFI
Smart Wi-fi interface to manage gates and garage doors by smartphone (*).

Pc./Pack 1

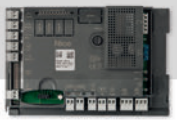

MCA1
Spare control unit for MC824H.

Pc./Pack 1

PS324
24 V battery with integrated battery charger.

Pc./Pack 1

MCA3
Spare control unit, for MC824HR **.

Pc./Pack 1

MCA4
Spare control unit, for MC824L.

Pc./Pack 1

* Not compatible with the Solemyo kit and PS324

** Not compatible with the Solemyo kit.

KYVOPOLOTOVARY.CZ

Nice

BiDi | Yubii | SOLEMYO | OPERA | 24V

Moonclever

Control unit for 24 Vdc gear motors for swing gates, without encoder

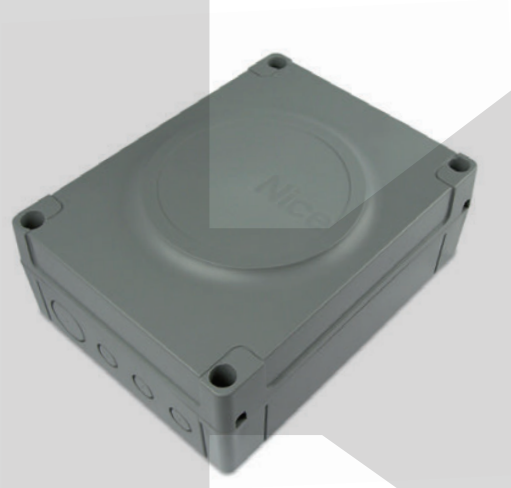

Compatible with the solar power kit Solemyo.

Compatible with the Opera system whose multi-function O-View display (mountable in the box) enables the system to be personalised, modifying the opening and closing positions, staggered closing of the leafs and decelerations, diversifying the parameters such as force, speed and obstacle sensitivity for each motor.

Safe and reliable: thanks to obstacle detection throughout travel and provision for the connection of latest generation resistive sensitive edges.

Intelligent: automatic fault diagnostics and signals via flashing light and confirmation leds.

Easy and complete manual programming, thanks to the three keys and eight LEDs.

Savings, respect for the environment, and autonomy: when connected to the buffer battery or Solemyo kit, consumption on standby is reduced to just 0.1 W.

No black out: continues to work even during power failures using optional (PS124) batteries that fit inside the control unit.

Built-in radio receiver: the built-in radio card is also compatible with Nice Flo and Smilo systems. Possibility of memorising up to 100 transmitters.

The control unit is designed to take SM plug-in receivers.

Discover the complete range of **BiDirectional products** on page 176.

Discover all the benefits of the **Yubii** system on page 170.

TECHNICAL SPECIFICATIONS

Code	Description	Pc/Pack
MC424L	Control unit for one or two 24 V motors without encoder, with built-in radio receiver and provision for Solemyo and Opera systems	1

Code	**MC424L**
Power supply (Vac 50/60 Hz)	230 ± 10%
Battery power (Vdc)	21 ÷ 28
Maximum motor power (VA; A)	75; 3
Maximum accessories power 24 V (A)	0,2 +0,1
Maximum flashing light power (V; W)	24; 25
Maximum gate open indicator power CA (V; W)	24; 5
Maximum electric lock power (Vac; VA)	12; 15
Working time "TL" (s)	-
Pause time "TP" (s)	5 ÷ 180
Delay 1st motor in opening TRA (s)	0 ÷ 50% TL
Delay 2nd motor in closing TRC (s)	-
Courtesy light time TCOR (s)	-
Pre-flashing time TPRE (s)	3
Force adjustment (%)	-
Anti-crushing device (sensitivity)	1 ÷ 8
Case dimensions (mm)	230x125x300 h

COMMON ACCESSORIES

IT4WIFI
Smart Wi-fi interface to manage gates and garage doors by smartphone (*).

Pc./Pack 1

IBT4N
Interface for connecting the O-View programming unit.

Pc./Pack 1

MCA2
Spare control unit for MC424L.

Pc./Pack 1

PS124
24 V battery with integrated battery charger.

Pc./Pack 1

* Not compatible with the Solemyo kit and PS124

KOVOPOLOTOVARY.CZ

Nice

BiDi | Yubii | OPERA | BLUEBUS | 230V

MC800

Control unit for motors for 230 V swing gates

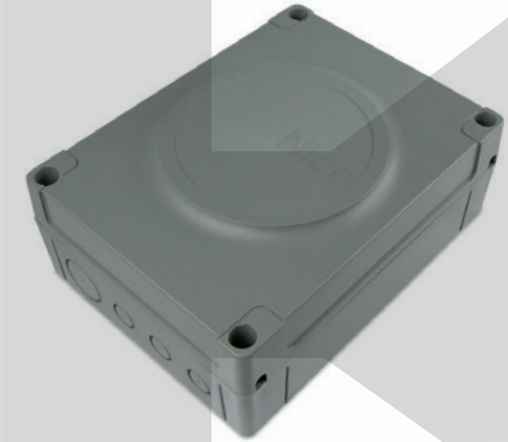

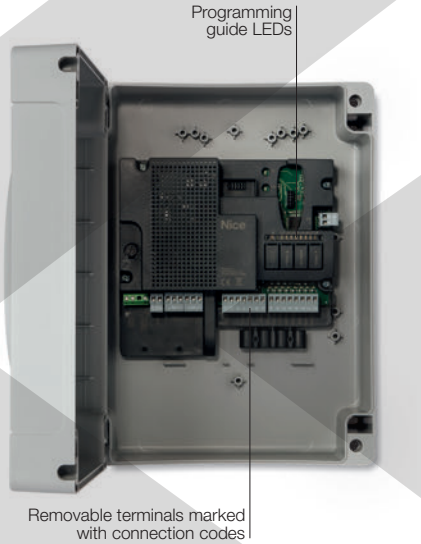

With Nice BlueBUS technology, compatible with the Opera system for automation management, programming and diagnostics, including remotely.

Compatible with the Opera system whose multifunction O-View display enables the system to be personalised, modifying the opening and closing positions, staggered closing of the leafs and decelerations, diversifying the parameters such as force, speed and obstacle sensitivity for each motor.

Universal power supply: 120/230 Vac 50/60 Hz.

Microprocessor logic: the MC800 control unit combines the advantages of the Opera system with the advanced functions of the Nice systems (gradual start and deceleration, automatic memorising of both limit switch positions and pedestrian pass door function).

Intelligent: on start-up, indicator to confirm correct power supply and efficient operation of the control unit; automatic fault diagnostics and signalling via the flashing light and confirmation LEDs.

Installation couldn't be simpler: thanks to the system BlueBUS, enabling connection of the control unit and accessories by means of just two wires.

Radio receiver: designed to take SM plug-in receivers.

Discover the complete range of **BiDirectional products** on page 176.

Discover all the benefits of the **Yubii** system on page 170.

TECHNICAL SPECIFICATIONS

Code	Description	Pc/Pack
MC800	Control unit for one or two 230V motors with Nice BlueBUS technology and provision for the Opera system	1

Code	**MC800**
Power supply (Vac 50/60 Hz)	120/230
Max. motor power and current (W; A)	900; 5
Maximum accessories power 24 V (A)	0,2
Maximum flashing light power (V; W)	120/230; 21
Maximum gate open indicator power CA (V; W)	24; 4
Maximum electric lock power (Vac; VA)	12; 15
Working time "TL" (s)	-
Pause time "TP" (s)	5 - 180
Delay 1st motor in opening TRA (s)	Programmable
Delay 2nd motor in closing TRC (s)	Programmable
Courtesy light time TCOR (s)	0: 250
Pre-flashing time TPRE (s)	0: 10
Force adjustment (%)	-
Case dimensions (mm)	230x120x300 h

COMMON ACCESSORIES

IBT4N
Interface for connecting the O-View programming unit.

Pc./Pack 1

IT4WIFI
Smart Wi-fi interface to manage gates and garage doors by smartphone (*).

Pc./Pack 1

MCA5
Spare control unit for MC800.

Pc./Pack 1

KOVOPOLOTOVARY.CZ

Nice

OPERA 230V

MC200

Control unit for rolling doors

Simplified programming via O-View thanks to compatibility with the Opera system, the automation system can be managed, programmed and controlled even at a distance, with considerable savings in time.

Built-in radio card: compatible with Nice FloR and Smilo systems.

Input programmable as step-by-step or open.

Photo or close input.

Input to connect 8.2 KOhm resistive sensitive edge.

Semi-automatic and automatic operation.

Semi-automatic and automatic operation.

Phototest or rolling door status output.

Possibility of remote connection.

TECHNICAL SPECIFICATIONS

Code	Description	Pc/Pack
MC200	For a 230 Vac motor for rolling doors, with semi-automatic and automatic closure, flashing light output and built-in receiver compatible with FloR and Smilo transmitters	1

Code	**MC200**
Power supply (Vac 50/60 Hz)	120 / 230 ± 10%
Battery power (Vdc)	-
Maximum motor power (VA; A)	450 (120V) - 900 (230V); 5
Max. current 24 V services and phototest (A)	0,055
Maximum flashing light power (V; W)	120 - 230; 40
Maximum gate open indicator power CA (V; W)	24V - 1W
Working time "TL" (s)	5 ÷ 120
Pause time "TP" (s)	1 ÷ 120
Case dimensions (mm)	128x112x43 h

COMMON ACCESSORIES

IT4WIFI
Smart Wi-fi interface to manage gates and garage doors by smartphone.

Pc./Pack 1

IBT4N
Interface for connecting the O-View programming unit.

Pc./Pack 1

KOVO POLOTOVARY.CZ

Nice

BiDi | Yubii | OPERA | 230V | 400V

D-Pro 500

Control units for motors with mechanical and electronic limit switch

Both automatic and deadman operation.

uitable for all types of motors, single phase without integrated inverter and three-phase, with 2.2 kW maximum power.

Easy programming and 2 diagnostics LEDs.

High performance: with possibility of adding a dedicated module for optional potential free outputs.

Compatible with all types of sensitive edges, including wireless.

Easy to programme: thanks to the O-View programmer with multifunction display for connection through the IBT4N interface (both optional).

Safe: protected by a plastic shell, to avoid any risk of electrical shock.

Radio receiver: dedicated slot for inserting Nice plug-in receivers.

Intelligent: the service warning for maintenance can be programmed according to the number of manoeuvres required.

Discover the complete range of **BiDirectional products** on page 176.

Discover all the benefits of the **Yubii** system on page 170.

TECHNICAL SPECIFICATIONS

Code	Description
DPRO500	Control unit for 230 Vac, 2.2 kW single phase motor, or 400 Vac, 2.2 kW three phase motor

Code	**DPRO500**
ELECTRICAL DATA	
Power supply (Vac 50/60 Hz)*	1~230 / 3~400
Max motor power (kW)	2,2
Logic unit power supply (Vdc)	24
Power in standby	< 5 VA
Pre limit input	Programmable
External control inputs	Wired inputs, all programmable
Sensitive edges	Optical, 8.2 kΩ resistive and 8.2 kΩ pneumatic
Extra output	2 free programmable and potential free contacts (by means of NDA040 module)
DC output	24 Vdc 1°
Stop input	Normally closed contacts
DIMENSIONAL AND GENERAL DATA	
Protection level (IP)	55
Working temp. (°C Min/Max)	-20 ÷ +50
Dimensions (mm)	210x125x310 h
Weight (kg)	3

COMMON ACCESSORIES

IT4WIFI
Smart Wi-fi interface to manage gates and garage doors by smartphone.

Pc./Pack 1

IBT4N
Interface for connecting the O-View programming unit.

Pc./Pack 1

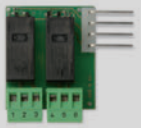

NDA040
For optional potential free outputs.

Pc./Pack 1

NOVO POLOTOVARY.CZ

Nice

NEW BiDi Yubii SOLEMYO OPERA 24V

D-Pro 924

Control unit for motors for sectional doors, 24 V, with encoder or electromechanical limit switch, suitable for Sumo

Compatible with the solar power kit Solemyo.

Compatible with the Opera system; thanks to the multifunction O-View display (mountable in the box), this enables the system to be personalised, modifying the opening and closing positions and decelerations and diversifying the parameters such as force, speed and obstacle sensitivity for each motor.

Practical and safe: new box with 3 built-in buttons in the cover to control the automation. Ample internal space for wiring and accessories. Protective inner cover to guarantee maximum installation safety and prevent accidental damage to the electronics.

User-friendly: the new programming procedure with button and DIP switch and practical removable connectors further simplifies installation.

Compatible with the IBT4N interface: The dedicated slot enables connection of Bus T4 compatible accessories and programming interfaces.

Complete: the inputs and outputs programmable with O-View, new relay outputs and compatibility with all the sensitive edges most popular on the market (resistive and optical) make it ideal for all needs.

Safe and reliable: thanks to obstacle detection throughout door/gate travel, with provision for connection of latest generation resistive sensitive edges.

Savings, respect for the environment, and autonomy: when connected to the buffer battery or Solemyo kit, consumption in standby is reduced to just 0.1 W.

Intelligent: automatic fault diagnostics and signals via flashing light and confirmation leds.

No black out: continues to work even during power failures using optional (PS124) batteries that fit inside the control unit

Discover the complete range of **BiDirectional products** on page 176.

Discover all the benefits of the **Yubii** system on page 170.

TECHNICAL SPECIFICATIONS

Code	Description	Pc/Pack
DPRO924	Control unit for 24V motor (suitable for Sumo), with provision for Solemyo and Opera	1

Code	DPRO924
Power supply (Vac 50/60 Hz)	230 ± 10%
Battery power (Vdc)	21 ÷ 28
Maximum motor power (VA; A)	360 (W); 15
Maximum accessories power 24 V (A)	0,2
Maximum flashing light power (V; W)	12; 21
Pause time "TP" (s)	1 : 250
Working time "TL" (s) / Pause time "TP" (s)	- / 1 ÷ 1023
Courtesy light time TCOR (s)	0 : 250
Pre-flashing time TPRE (s)	0 : 60
Anti-crushing device (sensitivity)	min ÷ max
Case dimensions (mm)	210x125x310 h

COMMON ACCESSORIES

IT4WIFI
Smart Wi-fi interface to manage gates and garage doors by smartphone (*).

Pc./Pack 1

IBT4N
Interface for connecting the O-View programming unit.

Pc./Pack 1

DPCU1
Spare control unit, for DPRO924.

Pc./Pack 1

PS224
24 Vdc buffer batter.

Pc./Pack 1

* Not compatible with the Solemyo kit and PS124

KOVOPOLOTOVARY.CZ

Control unit functions

PROGRAMMABLE FUNCTIONS	MC200	DPR0500	MC800	DPR0924	ROX600	MC824H/MC824L/MC824HR/HK7024	MC424L	WALKY	HO2124	ROAD	ROBUS 400	ROBUS 600/1000/NAKED/SLIGHT/ROBUS HS	RUN/RUN HS	SPY550	SPY650/SPY800/SPY650HS	SPINKIT	SPINBUSKIT	SPINBUS	TN2030L/TENKIT	SOON/TN2010L	M-BAR/L-BAR	S-BAR	WIDE
Manual operation		•	•	•	•	•			•		•	•	•	•	•		•	•		•	•	•	•	•
Semi-automatic operation	•	•	•	•	•	•	•	•	•	•	•	•	•	•	•	•	•	•	•	•	•	•	•	•
Automatic operation	•	•	•	•	•	•	•	•	•	•	•	•	•	•	•	•	•	•	•	•	•	•	•	•
Automatic operation + always close		•	•	•	•	•			•	•		•	•	•	•		•	•			•	•	•	•
Condominium operation	•	•	•	•	•	•	•	•	•	•	•	•	•	•	•	•	•	•	•	•	•	•	•	•
Pre-flashing		•	•	•	•	•	•		•		•	•	•	•	•		•	•			•	•	•	•
Close again 5 s after Photo		•	•	•	•	•	•	•	•		•	•	•	•	•		•	•			•	•	•	•
Photo during opening, too		•		•	•						•	•	•	•	•		•	•			•	•	•	•
Gradual departure				•	•	•	•	•	•	•	•			•	•	•	•	•	•	•	•	•	•	•
Gradual stop				•	•	•	•	•	•	•	•			•	•	•	•	•	•	•	•	•	•	•
Flashing even during the Pause																								•
Courtesy light “on” Flashing light			•	•								•	•	•	•		•	•			•	•	•	
Impulsive courtesy light				•																				
Gate open light (CA) with proportional flashing	•		•		•		•	•			•	•	•	•	•		•	•			•	•	•	
Cancel stop during the Step-by Step cycle		•	•	•		•		•	•		•	•	•	•	•		•	•			•	•	•	
Photocell safety when each movement starts			•	•	•	•		•	•	•	•	•	•	•	•	•	•	•	•	•	•	•	•	
Automatic realignment when power supply returns																								
Positioning function			•	•	•	•	•	•	•	•	•	•	•	•	•	•	•	•	•	•	•	•	•	•
Hammering			•			5																		
Maintaining the pressure on oil-pressure motors			•																					
Activation of the Phototest	•			•	•		•			•						•			•					
Skip STOP during opening		•	•			•		•	•		•	•	•	•	•		•	•			•	•	•	
Skip STOP during closing		•	•			•		•	•	•	•	•	•	•	•	•	•	•	•	•	•	•	•	
CLOSE becomes PEDESTRIAN OPEN			•			•						•	•											
Photocells (PHOTO and/or PHOTO1) during opening too						•	•	•	•			•	•	•	•		•	•			•	•	•	•
Partial remote controlled inversion with PHOTO photocell												•	•	•	•		•	•			•	•	•	
Complete remote controlled inversion with PHOTO photocell	•	•	•	•	•	•	•	•	•	•	•	•	•	•	•	•	•	•	•	•	•	•	•	•
Exclude limit switch																								
Standard Step-by-Step function: Open-Close-Open			•	•		•		•	•		•	•	•	•	•		•	•			•	•	•	
Mode 2 Step-by-Step function: Open-Pause-Close-Open										•		•	•	•	•	•	•	•	•	•	•	•	•	
Mode 3 Step-by-Step function: Open-Stop-Close-Open				•	*5	•		•	•	•	•	•	•	•	•	•	•	•	•	•	•	•	•	
Temporary pause (photocell)											•	•	•	•	•		•	•			•	•	•	
Gate open light (CA) becomes “one way” traffic lights																								•

PROGRAMMABLE FUNCTIONS	MC200	DPR0500	MC800	DPR0924	ROX600	MC824H/MC824L/MC824HR/HK7024	MC424L	WALKY	HO2124	ROAD	ROBUS 400	ROBUS 600/1000/NAKED/SLIGHT/ROBUS HS	RUN/RUN HS	SPY550	SPY650/SPY800/SPY650HS	SPINKIT	SPINBUSKIT	SPINBUS	TN2030L/TENKIT	SOON/TN2010L	M-BAR/L-BAR	S-BAR	WIDE
Two way traffic lights		*5	•	•	•									•	•	•	•	•		•	•	•	•
Step-by-Step function Open-Stop-Close-Stop		•	•	•	•	•	•	•	•	•	•	•	•	•	•	•	•	•	•	•	•	•	•
Extension of work time		•		•																			
Pause time with presence detector		•		•		•	•	•	•	•	•	•	•	•	•	•	•	•	•	•	•	•	•
1st motor delay during opening			•			•	•		•														
Gate Open light with limit switch					•																		
Brake					•						•	•	•										•
Radio card incorporated in the control unit	•									•				•	•	•			•				
Stand-by				•		•	•	•	•		•	•			•		•	•		•	•	•	

KOVOPLOTOVARY.CZ

OUTPUTS/INPUTS	TTX4/TTXB4	TT2N	TT2Z	TT2D	TTDMS	TT1N	TT1L	MC200	DPR0500	MC800	DPR0924	ROX600	MC824H/MC824L/MC824HR/HK7024	MC424L	WALKY	ROAD	ROBUS 400	ROBUS 600/1000/NAKED/SLIGHT/ROBUS HS	RUN	RUNHS	SPY550	SPY650/SPY800/SPY650HS	SPINKIT	SPINBUSKIT	SPINBUS	TN2030L/TENKIT	SOON	TN2010L	M-BAR/L-BAR	S-BAR	WIDE
Motor 1 output								•	•	•	•	•	•	•	•	•	•	•	•	•	•	•	•	•	•	•	•	•	•	•	•
Motor 2 output										•			•	•	•												•		•			
Flashing light output								•	N	•	•	•	•	•	•	•	•	•	•	•	•	•	•	•	•	•	•	•	•	•	•	•
24 V motor power supply											•		•	•	•	•	•	•		•	•	•	•	•	•	•	•	•	•	•	•	•
230 Vac motor power supply				•				•	•	•		•						•		•												
400 Vac motor power supply									•										•													
Wide range power supply (120V-->230V)								•		•		•																				
Electric lock output										•	•		•	•	•			*3	*3	*3	*3	*3	*3		*3	*3	•	*3	*3	*3	*3	
Suction output									N	4/5	*5		*3		*3			*3	*3	*3	*3	*3	*3		*3	*3		*3	*3	*3	*3	
Phototest output											•	•		*4		•								•			•					
Gate open output light									N	•	*5	*5	•	•	*3			•	•	•	•	*3	*3		*3	*3		*3	*3	*3	*3	•
Step-by-step input								*4	5	•	•	•	•	•	•	•	•	•	•	•	•	•	•		•	•	•	•	•	•	•	•
Open input								*4	•	•	•	*4	•	B	*5			•	•	•	•		•		•	•		•	•	•	•	•
Close input									•	•	•	*4	•	B	*5			•	•	•	•	*5	*5		*5	*5		•	•	•	•	•
Partial open input									5	*5	*5		4/5	B	*5			*5	*5	*5	*5	*5	*5		*5	*5		*5	*5	*5	*5	
Stop input								•	•	•	•	•	•	*4	•	•	•	•	•	•	•	•	•	•	•	•	•	•	•	•	•	*4
Optical sensor input									•		•														•			•	•	•		
Resistive edge input								•	•	•	•	•	•	*4	•	•	•	•	•	•	•	•	•	•	•	•	•	•	•	•	*4
BlueBUS input										•			•		•			•	•	•	•		•		•	•		•	•	•		
PHOTO photocell input								•	•	*5	•	•	*5	•	*5	•	*5	*5	*5	*5	•	*5	•	*5	*5	•	*5	*5	*5	*5	•
PHOTO 1 photocell during closing input										*5			*5	•	*5		*5	*5	*5	*5	*5	*5					*5	*5	*5	*5		
PHOTO 2 photocell during opening input									5	*5	•		*5	B	*5		*5	*5	*5	*5	*5	*5					*5	*5	*5	*5	•
Limit switch input during opening (for 1 motor) FCA 1									•	•		•				•	•	•	•	•						•			•		•
Limit switch input during closing (for 1 motor) FCC 1									•	•		•				•	•	•	•	•						•			•		•
Limit switch input during opening (for 2 motors) FCA 2										•																					
Limit switch input during closing (for 2 motors) FCC 2										•																					
Auxiliary input																		•	•	•	•										
Courtesy light output									N	•	*5	*5	4/5		*3			*3	*3	*3	*3	*5	*5		*3	*3	•	*3	*3	*3	*3	•
Maintenance indicator light										*5	*5	*5	4/5		*3			*3	*3	*3	*3				*3	*3		*3	*3	*3	*3	
Single-phase load				•																												
Traffic lights									N	*5	*5		*5												*3	*3		*3	*3	•	*3	•
Loop detector																														•		

ADJUSTMENTS	TTX4/TTXB4	TT2N	TT2Z	TT2D	TTDMS	TT1N	TT1L	MC200	DPR0500	MC800	DPR0924	ROX600	MC824H/MC824L/MC824HR/HK7024	MC424L	WALKY	ROAD	ROBUS 400	ROBUS 600/1000/NAKED/SLIGHT/ROBUS HS	RUN	RUNHS	SPY550	SPY650/SPY800/SPY650HS	SPINKIT	SPINBUSKIT	SPINBUS	TN2030L/TENKIT	SOON	TN2010L	M-BAR/L-BAR	S-BAR	WIDE
Work time								•			•										•	•									
Pause time				•				•	•	•	•	•	•	•	•	•	•	•	•	•	•	•	•	•	•	•	•	•	•	•	•
Opening delay time										•			*2	•																	
Closing delay time										•			*2	•																	
Electronic adjustment force											*5					•	•	•	•	•	•	•	•	•	•	•	•	•	•	•	
Positioning force										•																					
Electromechanical adjustment force										•																					
Mechanical adjustment force																															
Current sensitivity											•		•	•	•	•	•	•	•	•	•	•	•	•	•	•	•	•	•	•	•
Speed											•		•	•	•	•	•	•	•	•	•	•	•	•	•	•	•	•	•	•	•
OPTIONAL ACCESSORIES																															
RADIO card with Nice plug-in																					•	•									
RADIO card with SM plug-in									•	•	•		•	•	•		•	•	•	•	•	•		•	•		•	•	•	•	•
Slot card for battery recharger																						•			•						
PER expansion card																															
PIU expansion card																															
AR electronic adjustment card																															
Pedestrian leaf																															
Man present																					•	•									
Partial inversion																					•	•									
Designed to accommodate buffer batteries											•		•	•	•		•	•	•	•		•		•	•		•	•	•	•	•

F with the AR accessory connected
R with the PER accessory connected
A with the AP accessory connected
N with the NDA040 accessory
P with the PIU accessory connected
B only an input can be programmed

***1** addition of the 2nd motor authorised
***2** not referred to a unit of time but to a distance
***3** programmable output
***4** just one programmable input/output
***5** programmable with O-View

NOVO POLOTOVARY.CZ

Connections

WALKY

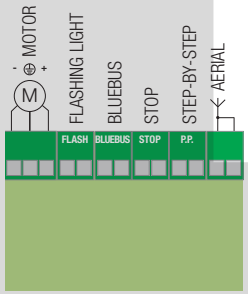

HOPP 7124

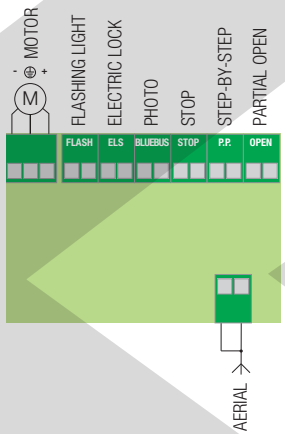

ROBUS 400/600/1000

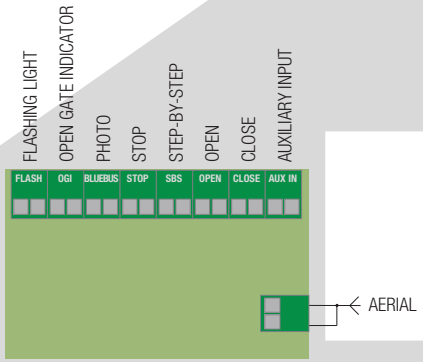

ROAD

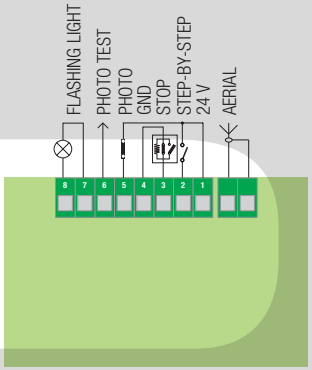

RUN/RUN HS

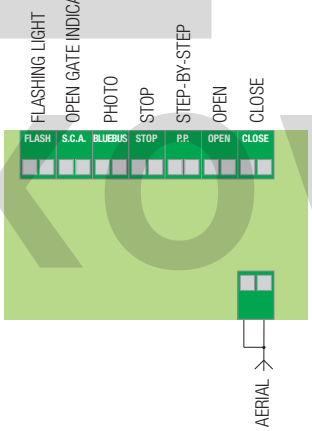

SLIGHT/NAKED SLIDING 400/ROBUS HS

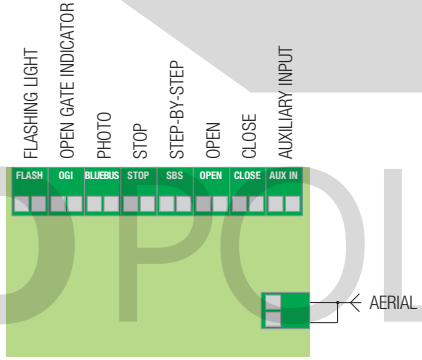

KOVOPOLOTOVARY.CZ

L-BAR/M-BAR

S-BAR

WIDE

KOVO POLOTOVARY.CZ

SPYBOX

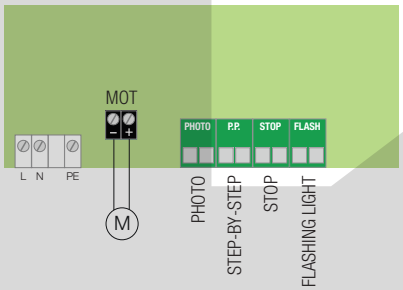

SPYBOXB/SPYBOXHS

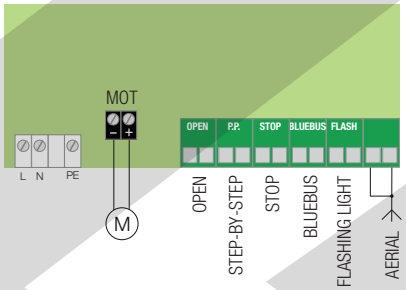

SPINBUS/SPINBUSKIT

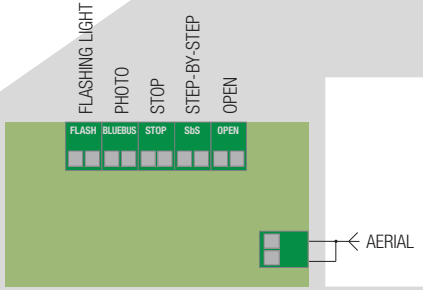

SPINKIT

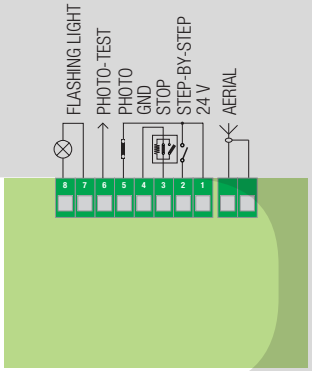

TN2010L

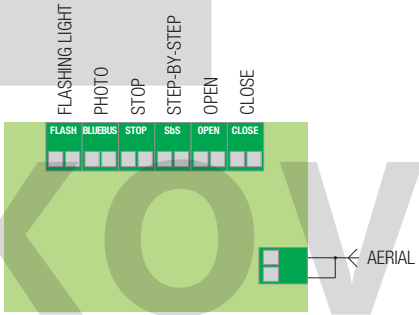

TN2030L/TENKIT

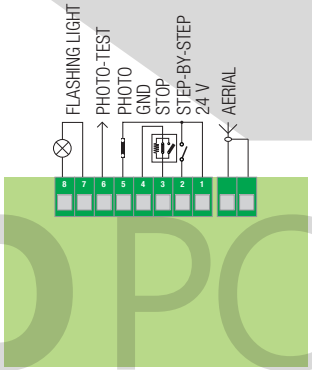

SOON

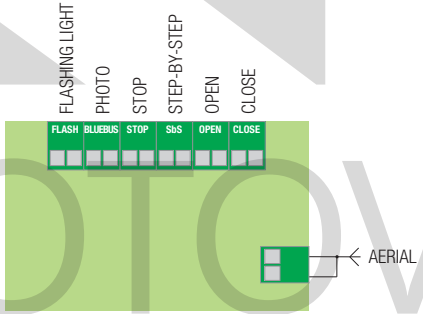

KOVOPOLOTOVARY.CZ

TTX4

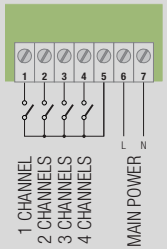

TTXB4

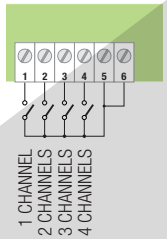

TT2N

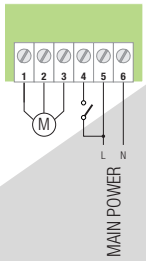

TT2L

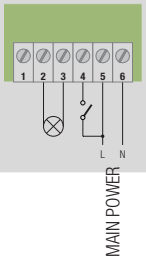

TT2D

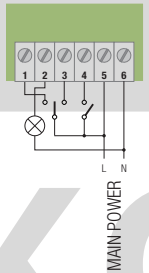

TT2Z

Connections for Dry-contact outputs

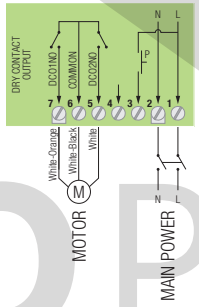

Connections for 3-wire mechanical motor outputs

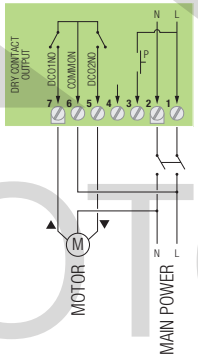

Connections for 2 independent switch outputs

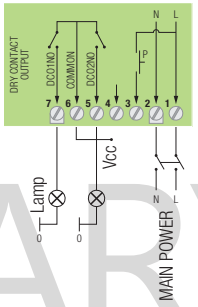

KOVOPOLOTOVARY.CZ

TTDMS

Connections for dimmerable lights

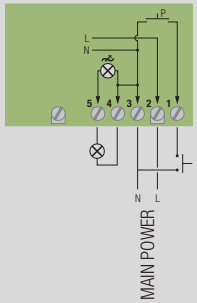

Connections for halogen or incandescent lights

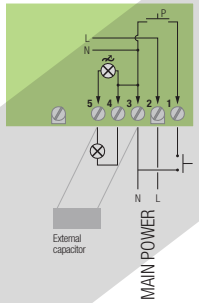

TT1N

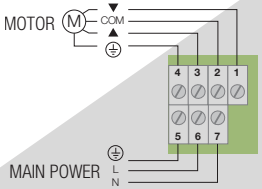

TT1L

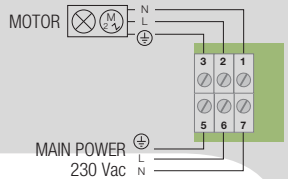

MC824H/MC824L/MC824HR/HK7024

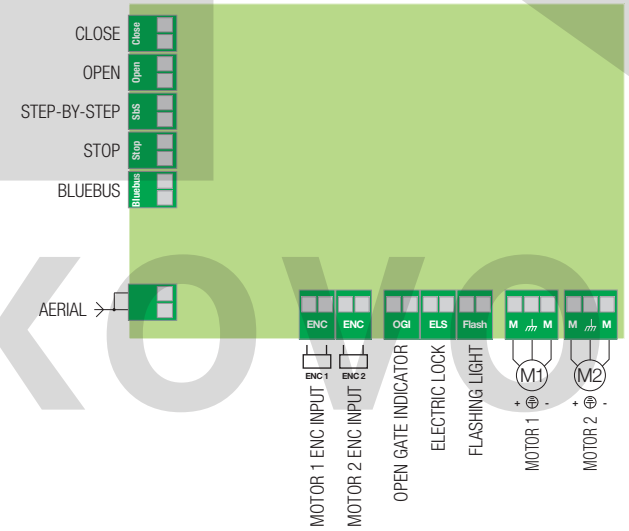

MC424L

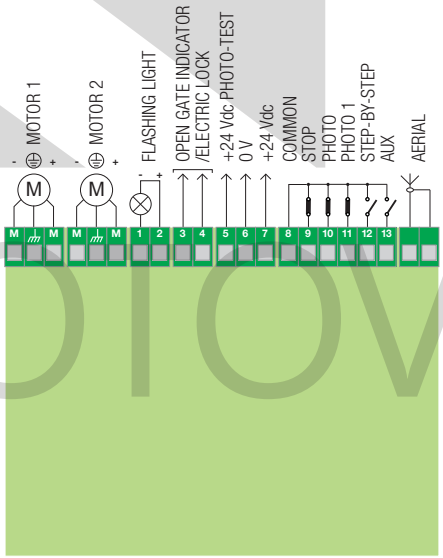

KOVOPOLOTOVARY.CZ

MC800

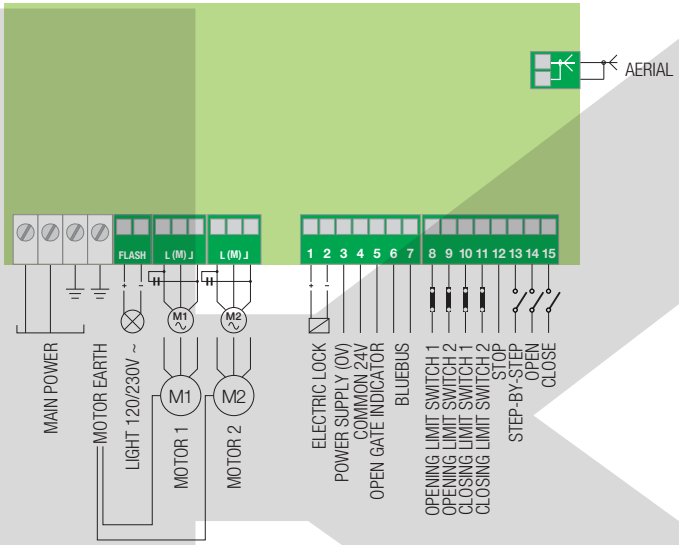

MC200

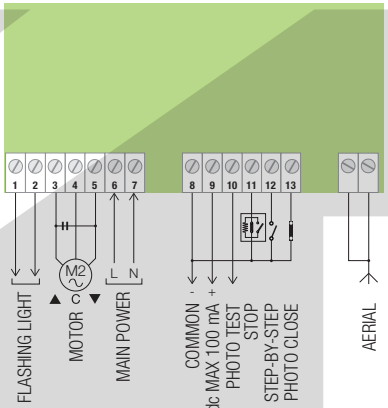

DPRO500

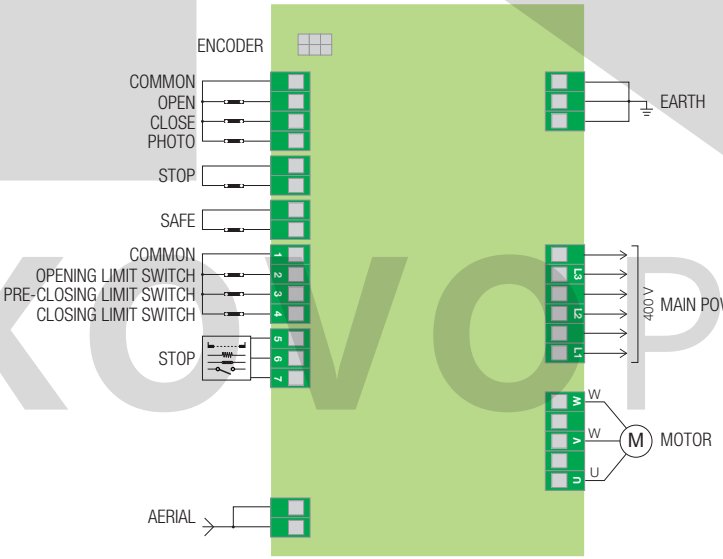

DPRO924

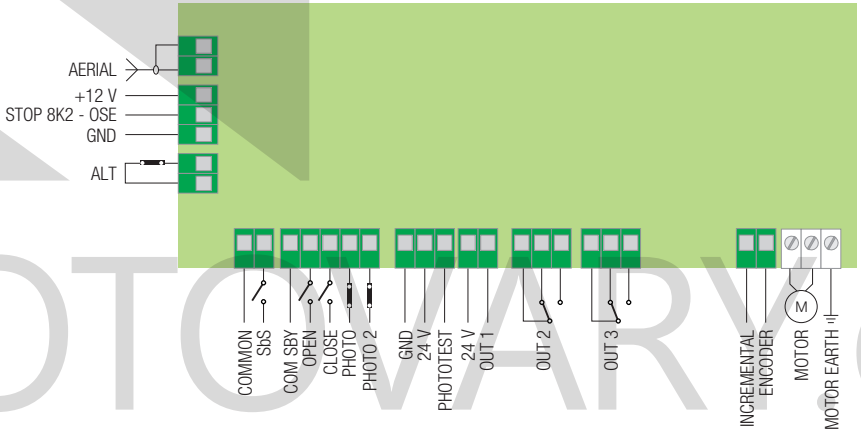

KOVOPOLOTOVARY.CZ

Installation diagrams

For Hi-Speed motors

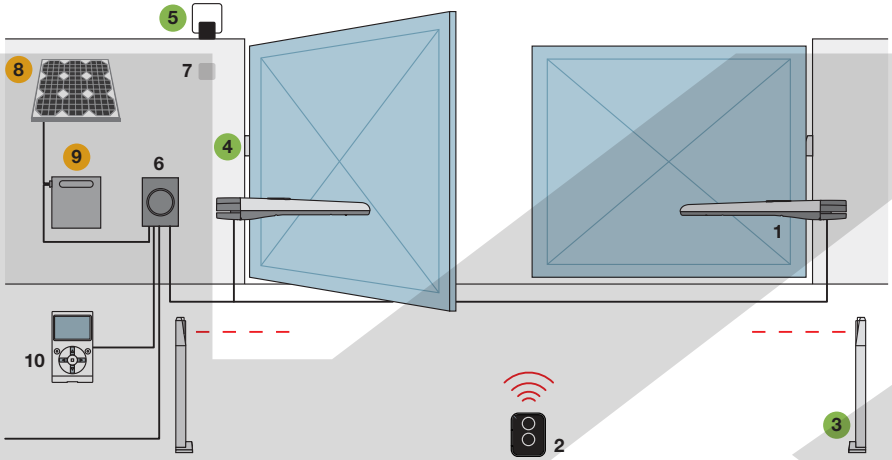

TOONA HS

1. Motor **2.** Transmitter **3.** Photocells mounted on posts **4.** Photocells **5.** Flashing light **6.** Control unit **7.** Digital or key switch **8.** SYP solar panel **9.** PSY24 battery box **10.** O-View multifunction display

- Accessories also available for the **Solemyo Air Net System** wireless version
- **Solemyo** solar power accessories

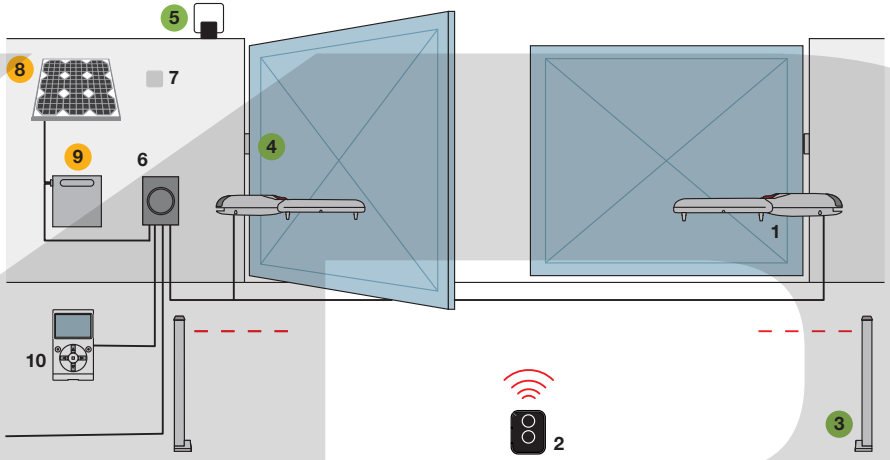

WINGO HS

1. Motor **2.** Transmitter **3.** Photocells mounted on posts **4.** Photocells **5.** Flashing light **6.** Control unit **7.** Digital or key switch **8.** SYP solar panel **9.** PSY24 battery box **10.** O-View multifunction display

- Accessories also available for the **Solemyo Air Net System** wireless version
- **Solemyo** solar power accessories

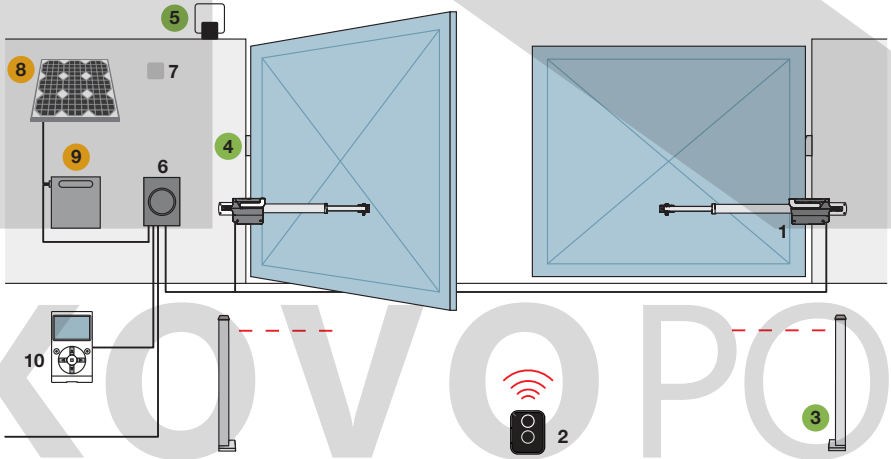

TITAN HS

1. Motor **2.** Transmitter **3.** Photocells mounted on posts **4.** Photocells **5.** Flashing light **6.** Control unit **7.** Digital or key switch **8.** SYP solar panel **9.** PSY24 battery box **10.** O-View multifunction display

- Accessories also available for the **Solemyo Air Net System** wireless version
- **Solemyo** solar power accessories

KOVO POLOTOVARY.CZ

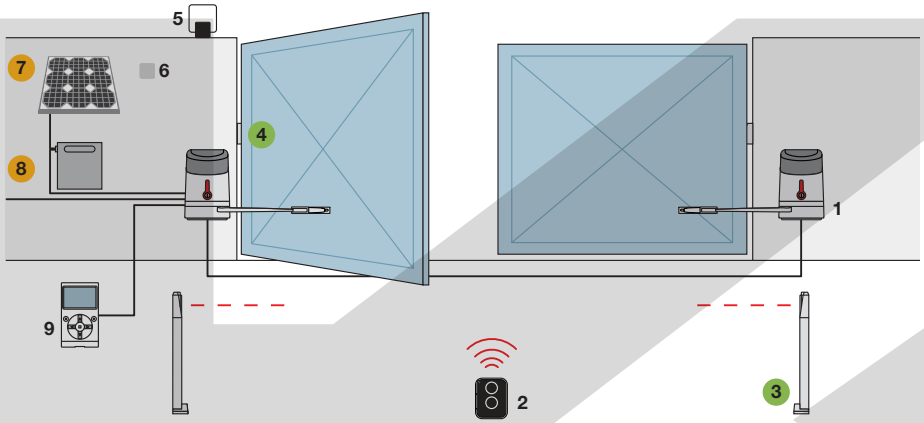

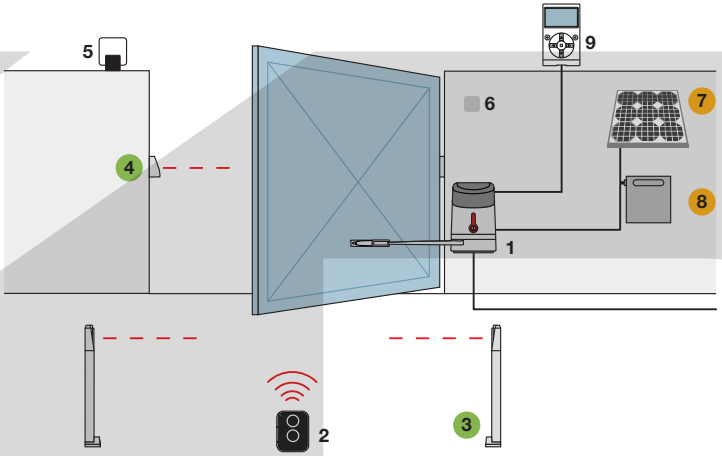

HYKE HS

1. Motor **2.** Transmitter **3.** Photocells mounted on posts **4.** Photocells **5.** Flashing light **6.** Digital or key switch
7. SYP solar panel **8.** PSY24 battery box **9.** O-View multifunction display (only for PP7124)
● Accessories also available for the **Solemyo Air Net System** wireless version
● **Solemyo** solar power accessories

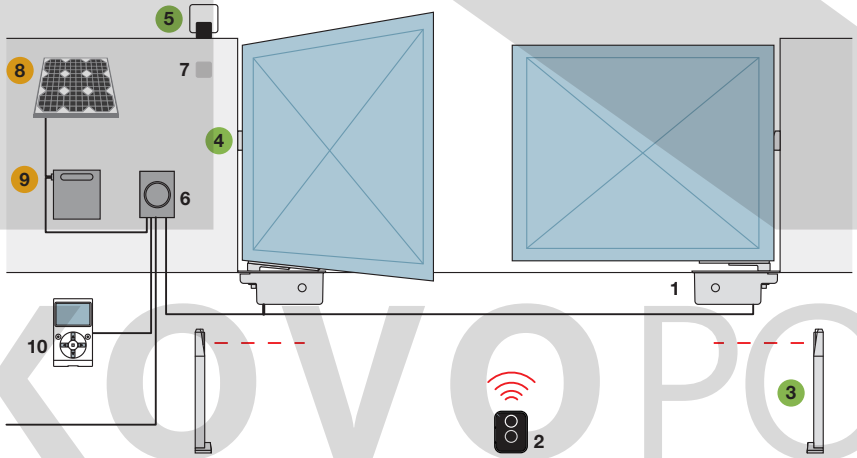

M-FAB HS

1. Motor **2.** Transmitter **3.** Photocells mounted on posts **4.** Photocells **5.** Flashing light **6.** Control unit **7.** Digital or key switch **8.** SYP solar panel **9.** PSY24 battery box **10.** O-View multifunction display
● Accessories also available for the **Solemyo Air Net System** wireless version
● **Solemyo** solar power accessories

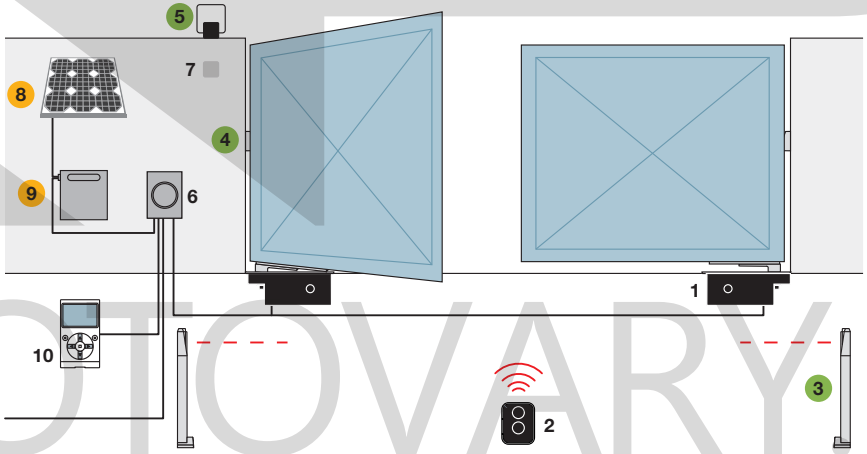

L-FAB HS

1. Motor **2.** Transmitter **3.** Photocells mounted on posts **4.** Photocells **5.** Flashing light **6.** Control unit **7.** Digital or key switch **8.** SYP solar panel **9.** PSY24 battery box **10.** O-View multifunction display
● Accessories also available for the **Solemyo Air Net System** wireless version
● **Solemyo** solar power accessories

KOVO POLOTOVARY.CZ

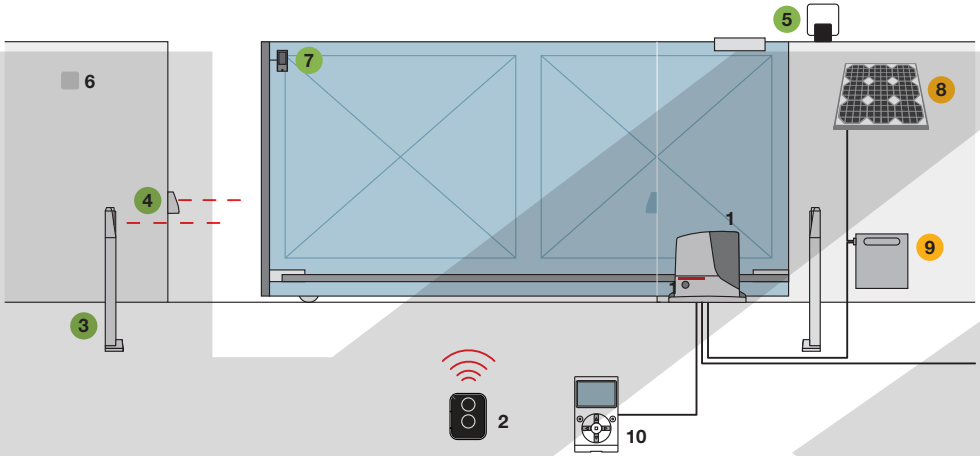

ROBUS HS

1. Motor **2.** Transmitter **3.** Photocells mounted on posts **4.** Photocells **5.** Flashing light **6.** Key switch **7.** Sensitive edges sensor **8.** SYP solar panel **9.** PSY24 battery box **10.** O-View multifunction display
● Accessories also available for the **Solemyo Air Net System** wireless version
● **Solemyo** solar power accessories

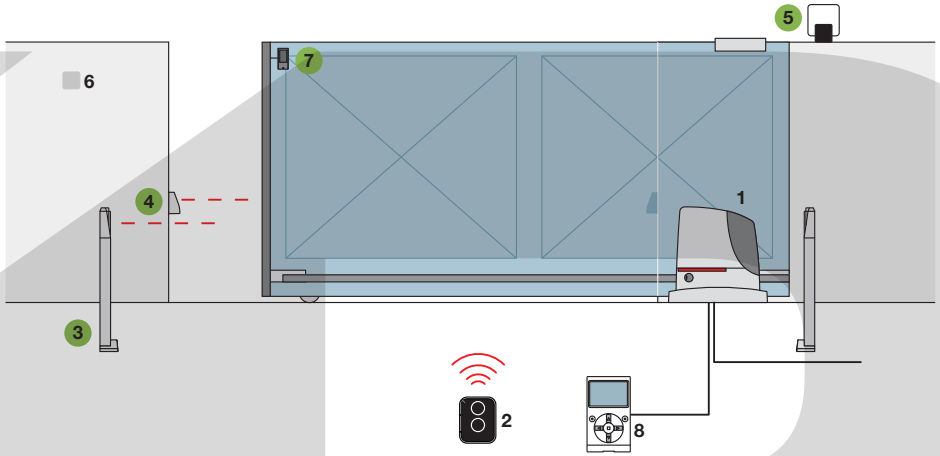

RUN HS

1. Motor **2.** Transmitter **3.** Photocells mounted on posts **4.** Photocells **5.** Flashing light **6.** Key switch **7.** Sensitive edges sensor **8.** O-View multifunction display
● Accessories also available for the **Solemyo Air Net System** wireless version

Sectional

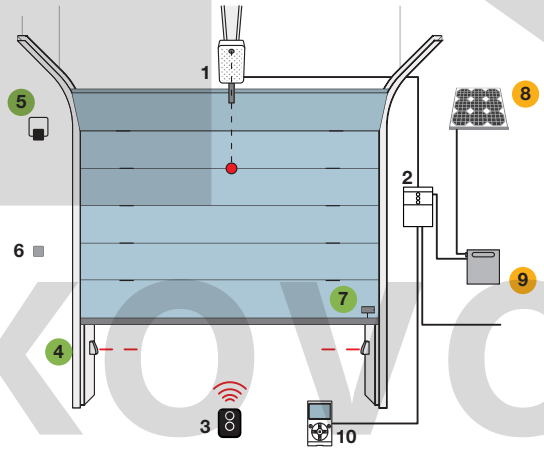

Non-projecting up-and-over door

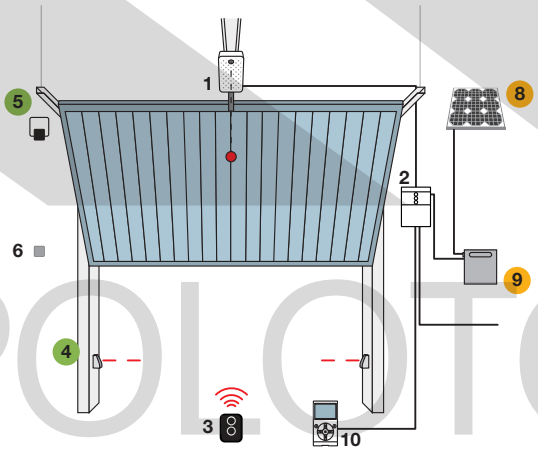

Projecting up-and-over door

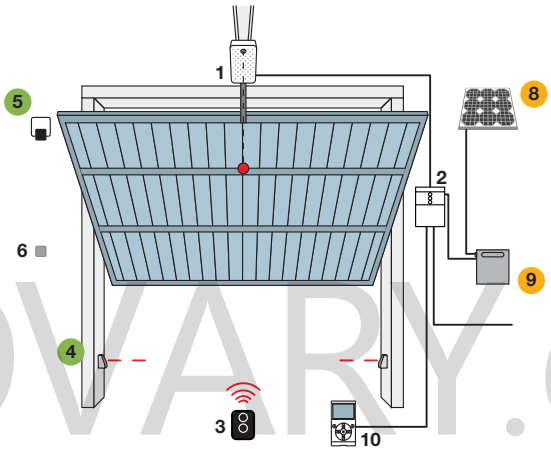

SPYKIT 650 HS BD

1. Motor **2.** Control unit **3.** Transmitter **4.** Photocells **5.** Flashing light
6. Digital or key switches **7.** Sensitive edges sensor **8.** SYP solar panel **9.** PSY24 battery box **10.** O-View multifunction display
● Accessories also available for the **Solemyo Air Net System** wireless version
● **Solemyo** solar power accessories

KOVO POLOTOVARY.CZ

For swing gates

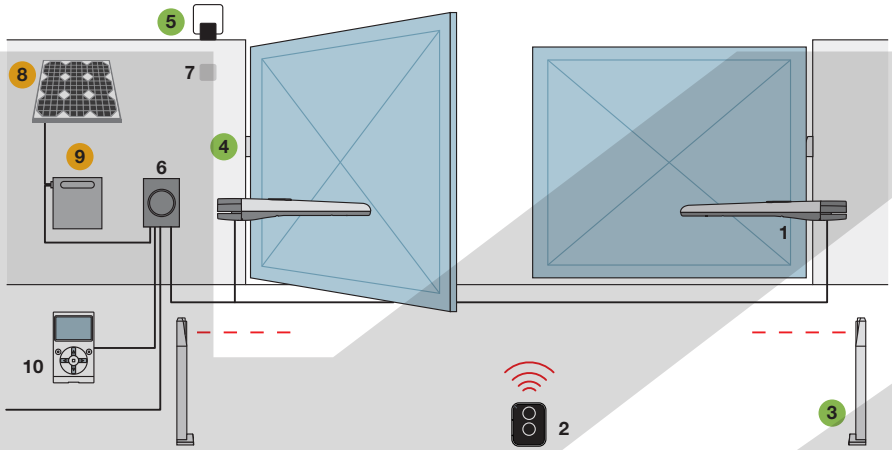

TOONA 4, TOONA 5, TOONAKIT BD

1. Motor **2.** Transmitter **3.** Photocells mounted on posts **4.** Photocells **5.** Flashing light **6.** Control unit **7.** Digital or key switch **8.** SYP solar panel **9.** PSY24 battery box **10.** O-View multifunction display
● Accessories also available for the **Solemyo Air Net System** wireless version
● **Solemyo** solar power accessories

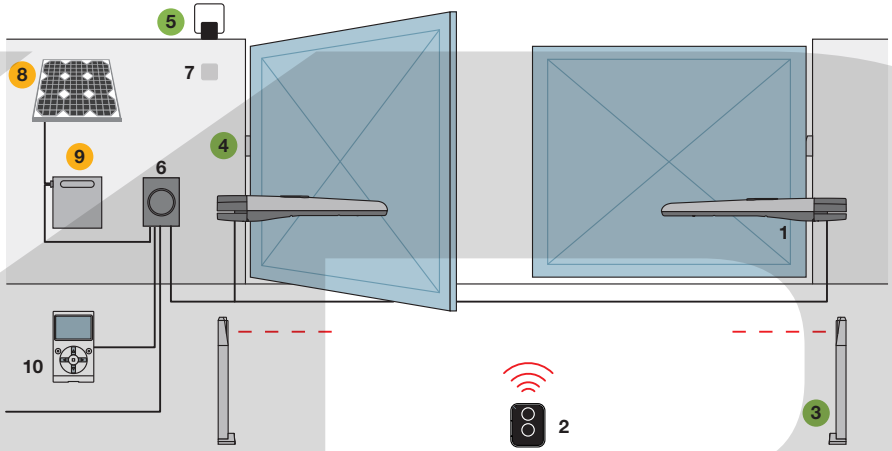

TOONA 7

1. Motor **2.** Transmitter **3.** Photocells mounted on posts **4.** Photocells **5.** Flashing light **6.** Control unit **7.** Digital or key switch **8.** SYP solar panel **9.** PSY24 battery box **10.** O-View multifunction display
● Accessories also available for the **Solemyo Air Net System** wireless version
● **Solemyo** solar power accessories

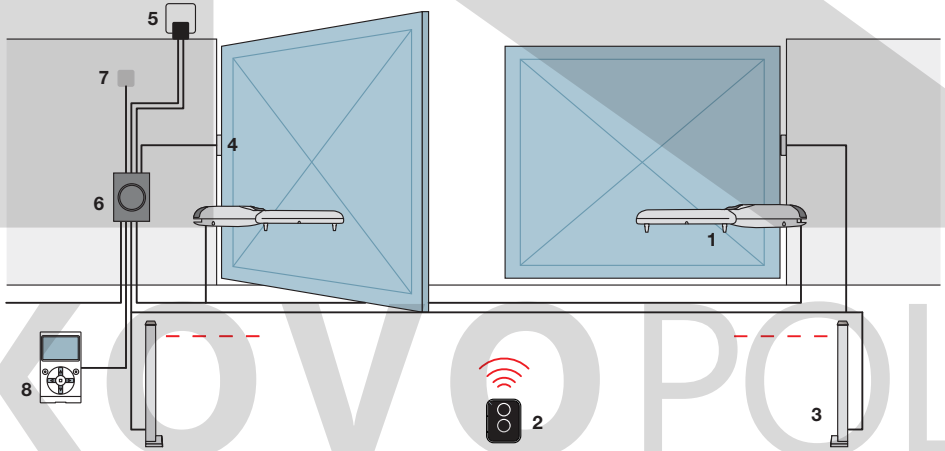

WINGO4KIT BD, WINGO5KIT BD

1. Motor **2.** Transmitter **3.** Photocells mounted on posts **4.** Photocells **5.** Flashing light **6.** Control unit **7.** Digital or key switch **8.** O-View multifunction display

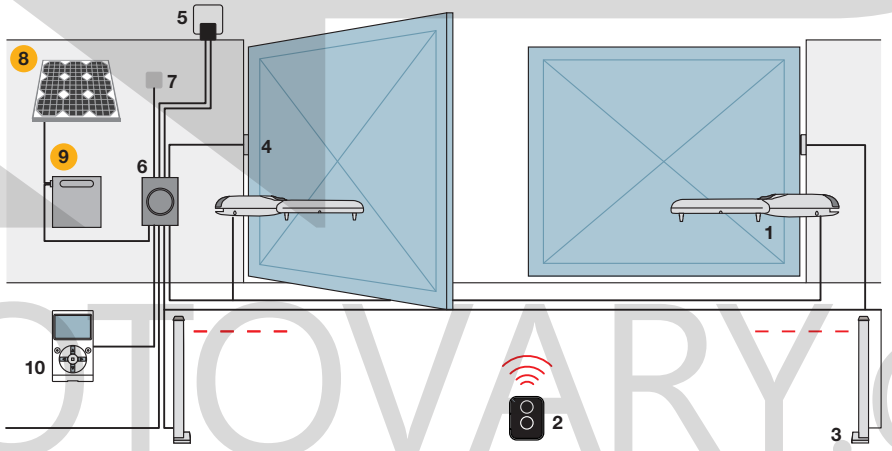

WINGOKIT 4024 BD, WINGOKIT 5024 BD

1. Motor **2.** Transmitter **3.** Photocells mounted on posts **4.** Photocells **5.** Flashing light **6.** Control unit **7.** Digital or key switch **8.** SYP solar panel **9.** PSY24 battery box **10.** O-View multifunction display
● **Solemyo** solar power accessories

KOVOPOLOTOVARY.CZ

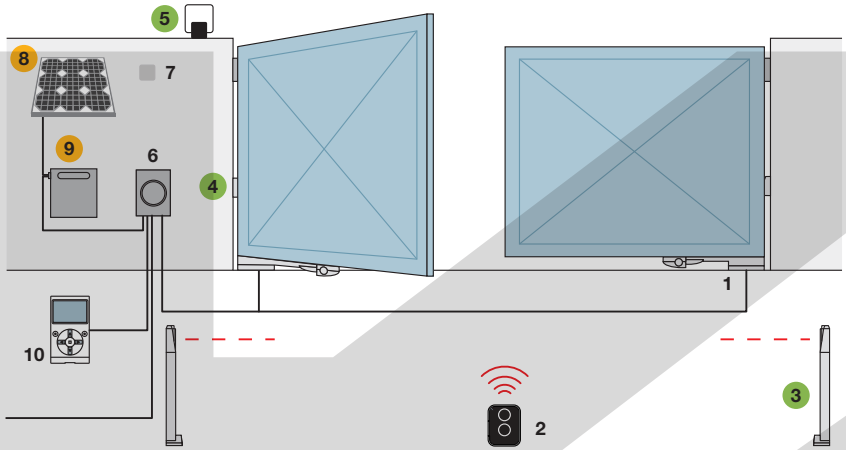

OLTRE 1824

1. Motor **2.** Transmitter **3.** Photocells mounted on posts **4.** Photocells **5.** Flashing light **6.** Control unit **7.** Digital or key switch **8.** SYP solar panel **9.** PSY24 battery box **10.** O-View multifunction display

- Accessories also available for the **Solemyo Air Net System** wireless version
- **Solemyo** solar power accessories

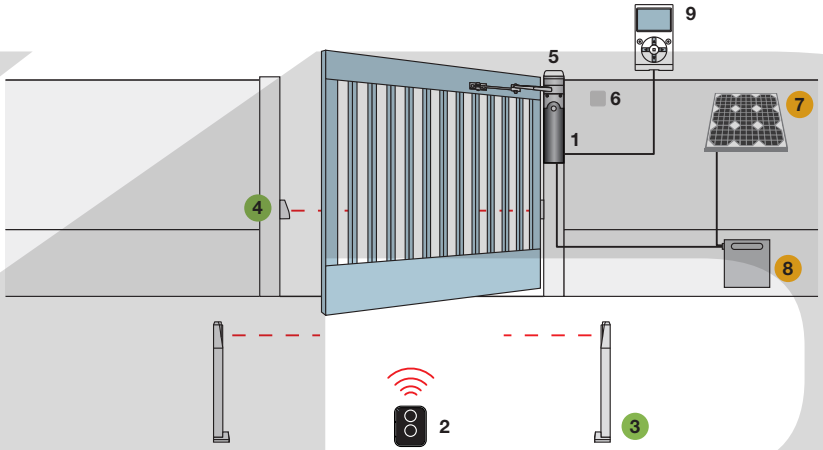

WALKYKIT 1024 BD

1. Motor **2.** Transmitter **3.** Photocells mounted on posts **4.** Photocells **5.** Flashing light **6.** Digital or key switch **7.** SYP solar panel **8.** PSY24 battery box **9.** O-View multifunction display

- Accessories also available for the **Solemyo Air Net System** wireless version
- **Solemyo** solar power accessories

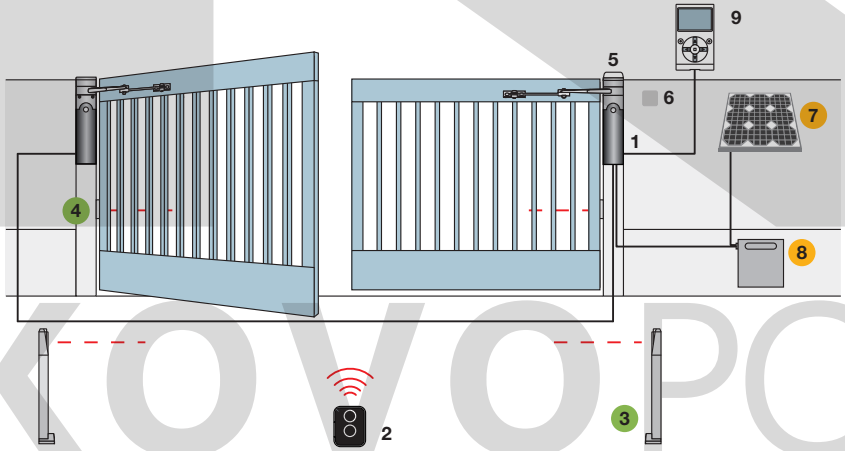

WALKYKIT 2024 BD

1. Motor **2.** Transmitter **3.** Photocells mounted on posts **4.** Photocells **5.** Flashing light **6.** Digital or key switch **7.** SYP solar panel **8.** PSY24 battery box **9.** O-View multifunction display

- Accessories also available for the **Solemyo Air Net System** wireless version
- **Solemyo** solar power accessories

KOVOPOLOTOVARY.CZ

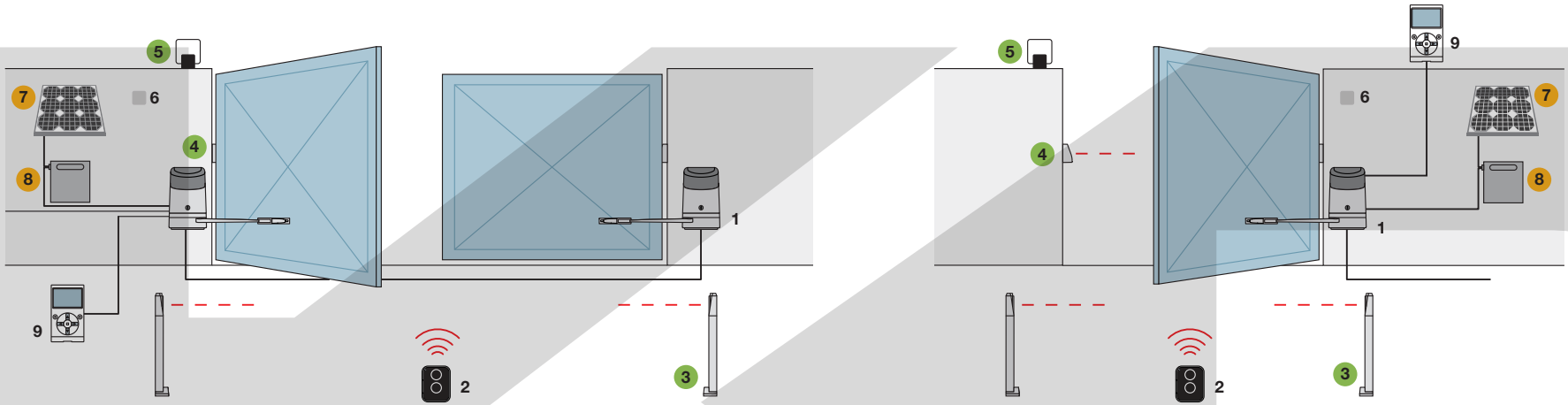

HOPP, HOPPKIT BD

1. Motor **2.** Transmitter **3.** Photocells mounted on posts **4.** Photocells **5.** Flashing light
6. Digital or key switch **7.** SYP solar panel **8.** PSY24 battery box **9.** O-View multifunction display (only for PP7124)
● Accessories also available for the **Solemyo Air Net System** wireless version
● **Solemyo** solar power accessories

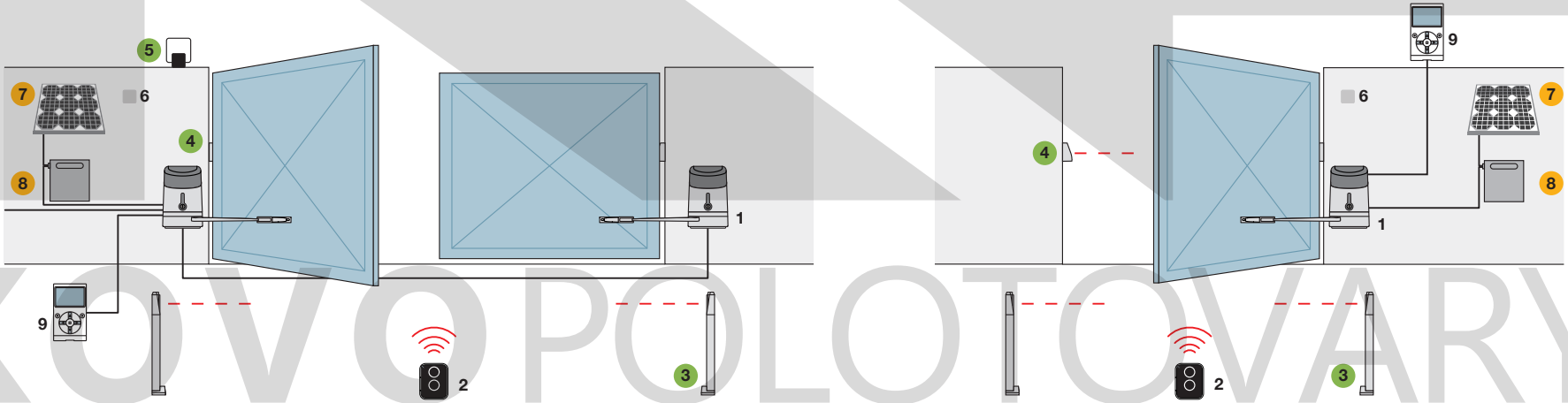

HYKE

1. Motor **2.** Transmitter **3.** Photocells mounted on posts **4.** Photocells **5.** Flashing light
6. Digital or key switch **7.** SYP solar panel **8.** PSY24 battery box **9.** O-View multifunction display (only for PP7124)
● Accessories also available for the **Solemyo Air Net System** wireless version
● **Solemyo** solar power accessories

KOVOPOLOTOVARY.CZ

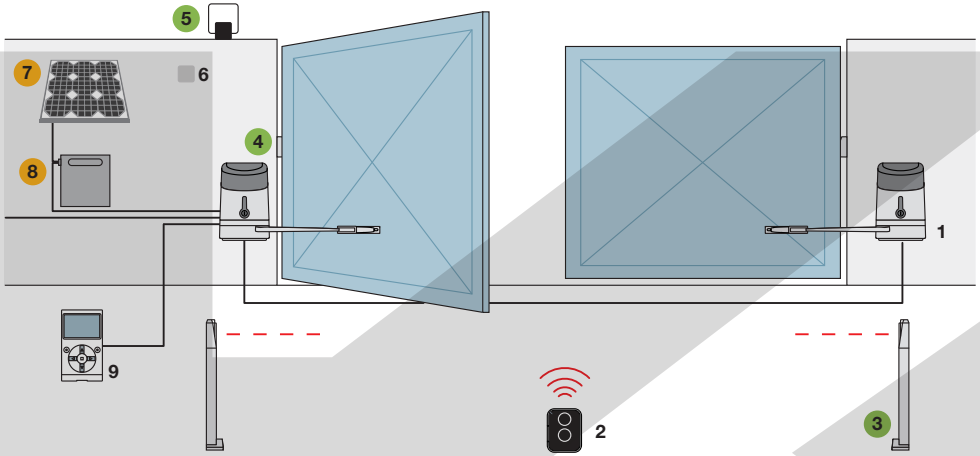

HYKEKIT BD

1. Motor **2.** Transmitter **3.** Photocells mounted on posts **4.** Photocells **5.** Flashing light **6.** Digital or key switch **7.** SYP solar panel **8.** PSY24 battery box **9.** O-View multifunction display (only for PP7124)
- Accessories also available for the **Solemyo Air Net System** wireless version
- **Solemyo** solar power accessories

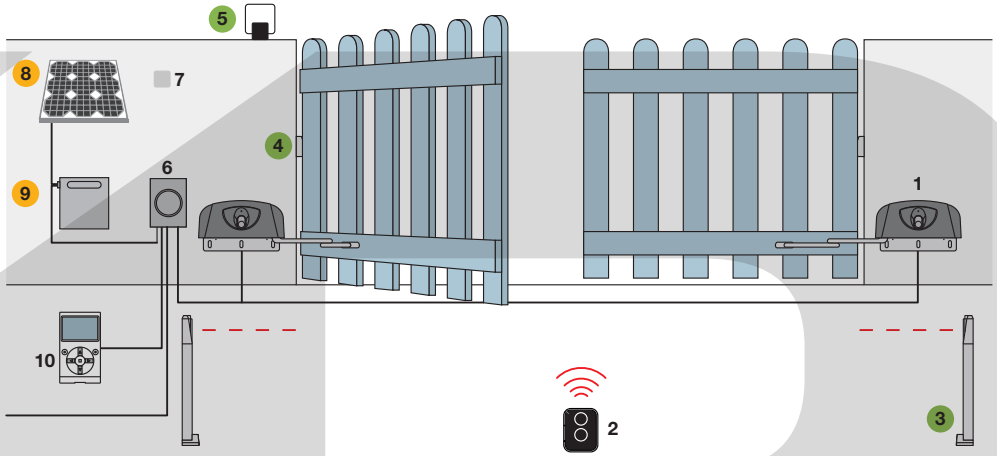

HYPPO 7000

1. Motor **2.** Transmitter **3.** Photocells mounted on posts **4.** Photocells **5.** Flashing light **6.** Control unit **7.** Digital or key switch **8.** SYP solar panel **9.** PSY24 battery box **10.** O-View multifunction display
- Accessories also available for the **Solemyo Air Net System** wireless version
- **Solemyo** solar power accessories

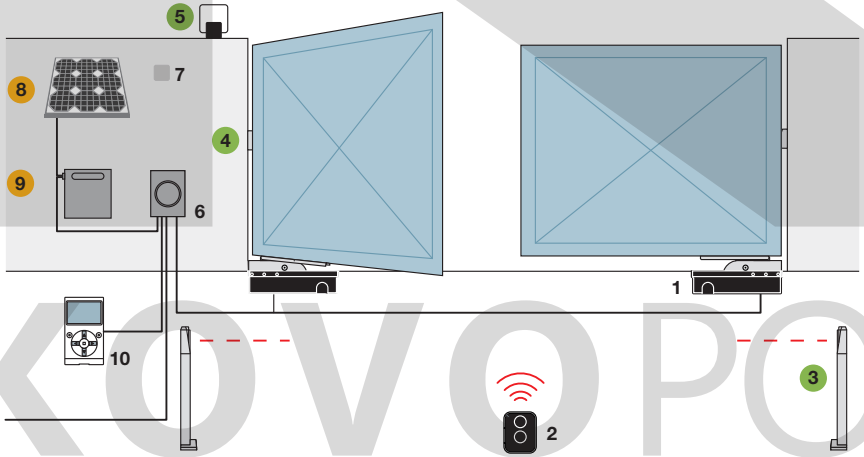

S-FAB, S-FABKIT 2124 BD

1. Motor **2.** Transmitter **3.** Photocells mounted on posts **4.** Photocells **5.** Flashing light **6.** Control unit **7.** Digital or key switch **8.** SYP solar panel **9.** PSY24 battery box **10.** O-View multifunction display
- Accessories also available for the **Solemyo Air Net System** wireless version
- **Solemyo** solar power accessories

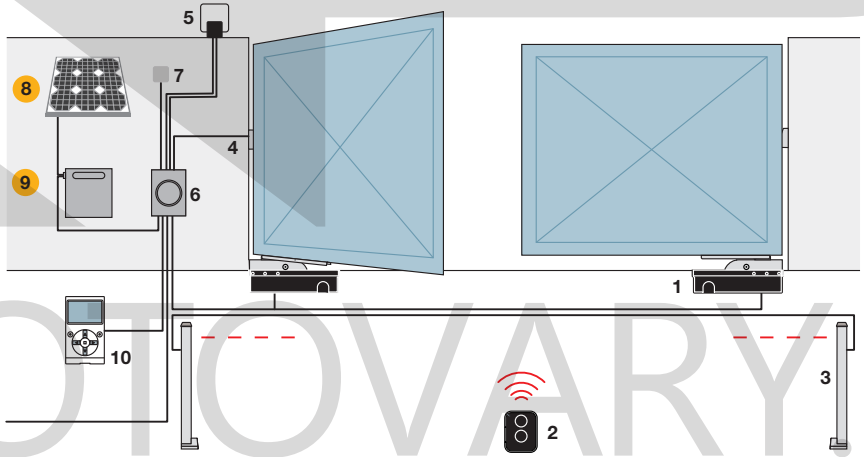

S-FABKIT 2024 BD

1. Motor **2.** Transmitter **3.** Photocells mounted on posts **4.** Photocells **5.** Flashing light **6.** Control unit **7.** Digital or key switch **8.** SYP solar panel **9.** PSY24 battery box **10.** O-View multifunction display
- **Solemyo** solar power accessories

KOVOPOLOTOVARY.CZ

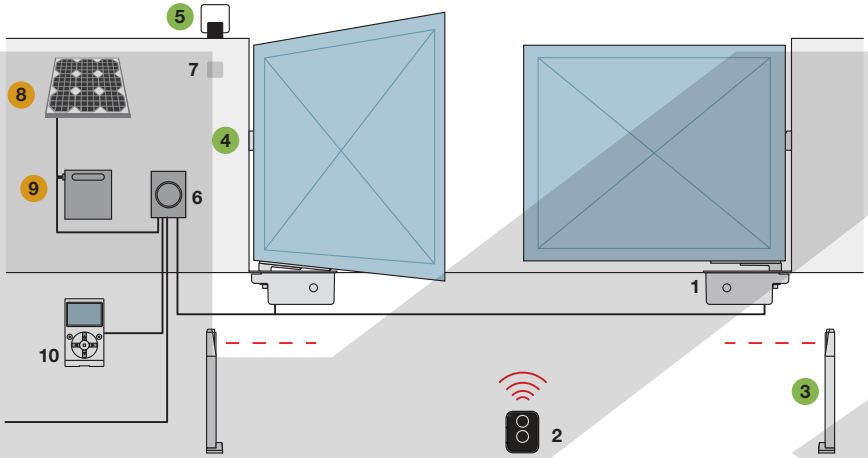

M-FAB

1. Motor **2.** Transmitter **3.** Photocells mounted on posts **4.** Photocells **5.** Flashing light **6.** Control unit **7.** Digital or key switch **8.** SYP solar panel **9.** PSY24 battery box **10.** O-View multifunction display

- Accessories also available for the **Solemyo Air Net System** wireless version
- **Solemyo** solar power accessories

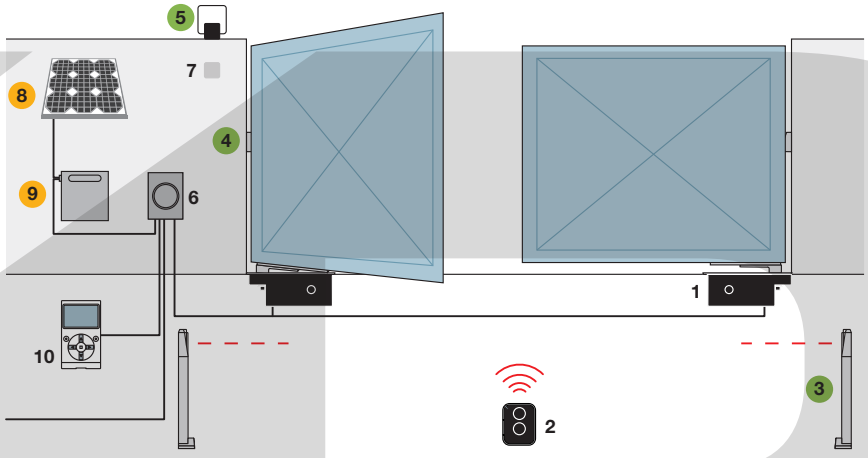

L-FAB, BIG-FAB

1. Motor **2.** Transmitter **3.** Photocells mounted on posts **4.** Photocells **5.** Flashing light **6.** Control unit **7.** Digital or key switch **8.** SYP solar panel **9.** PSY24 battery box **10.** O-View multifunction display

- Accessories also available for the **Solemyo Air Net System** wireless version
- **Solemyo** solar power accessories

KOVOPOLOTOVARY.CZ

For sliding gates

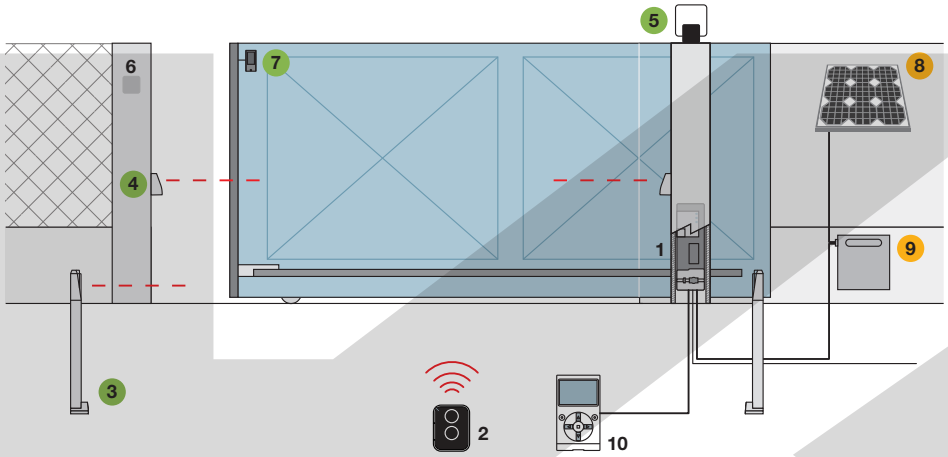

NAKED SLIDING 400

1. Motor **2.** Transmitter **3.** Photocells mounted on posts **4.** Photocells **5.** Flashing light **6.** Key switch **7.** Sensitive edges sensor **8.** SYP solar panel **9.** PSY24 battery box **10.** O-View multifunction display

- Accessories also available for the **Solemyo Air Net System** wireless version
- **Solemyo** solar power accessories

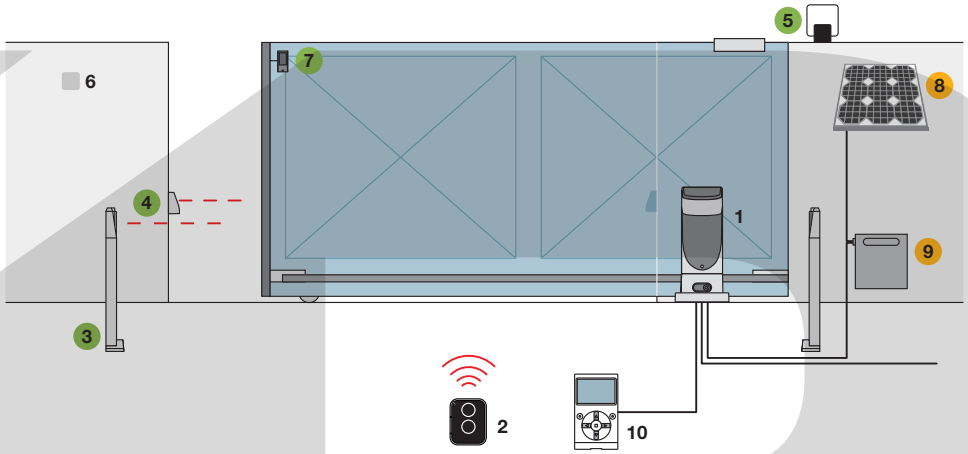

SLIGHT, SLIGHT KIT BD

1. Motor **2.** Transmitter **3.** Photocells mounted on posts **4.** Photocells **5.** Flashing light **6.** Key switch **7.** Sensitive edges sensor **8.** SYP solar panel **9.** PSY24 battery box **10.** O-View multifunction display

- Accessories also available for the **Solemyo Air Net System** wireless version
- **Solemyo** solar power accessories

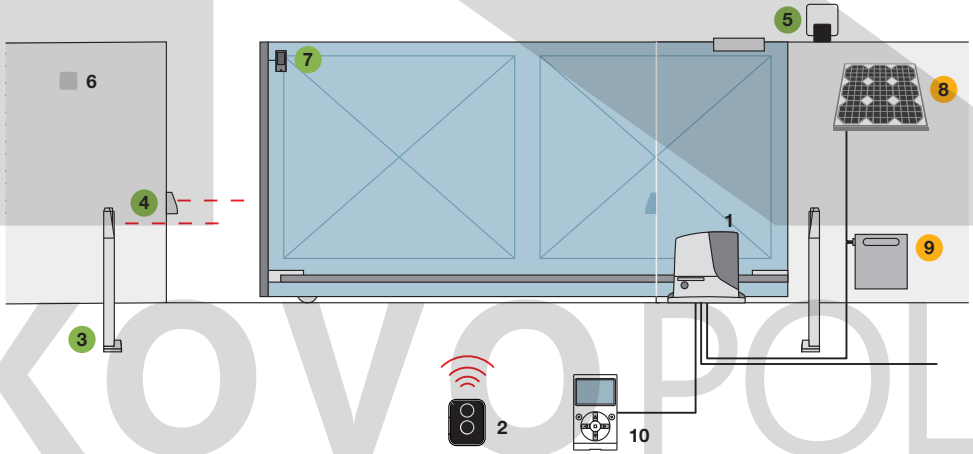

ROBUS 400/600/1000, ROBUSKIT 400 BD, ROBUSKIT 600 BD

1. Motor **2.** Transmitter **3.** Photocells mounted on posts **4.** Photocells **5.** Flashing light **6.** Key switch **7.** Sensitive edges sensor **8.** SYP solar panel **9.** PSY24 battery box **10.** O-View multifunction display

- Accessories also available for the **Solemyo Air Net System** wireless version
- **Solemyo** solar power accessories

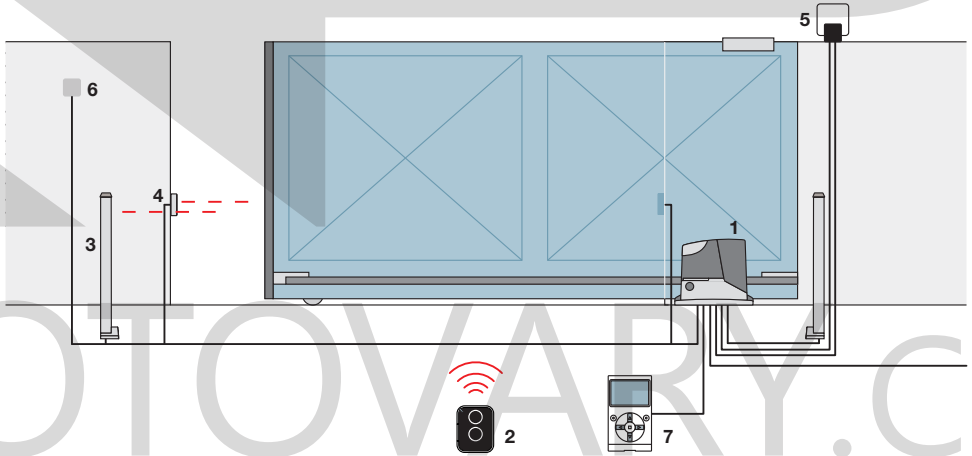

ROADKIT

1. Motor **2.** Transmitter **3.** Photocells mounted on posts **4.** Photocells **5.** Flashing light **6.** Key switch **7.** O-View multifunction display

KOVOPOLOTOVARY.CZ

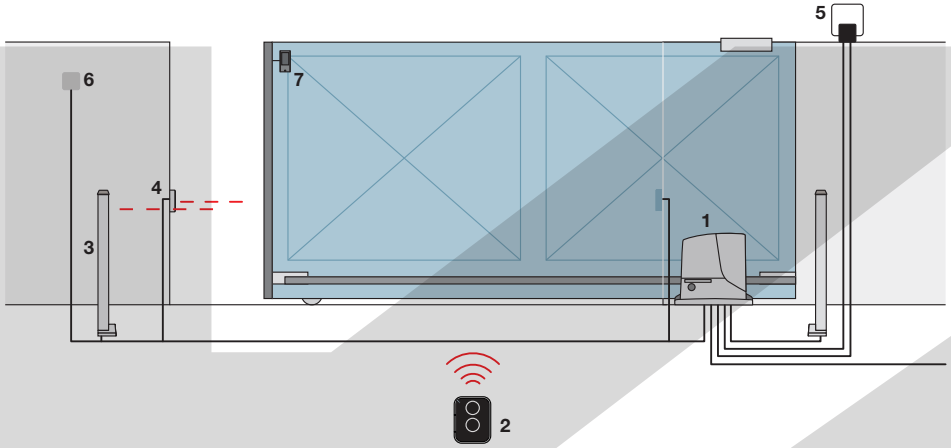

ROX600KCE

1. Motor **2.** Transmitter **3.** Photocells mounted on posts **4.** Photocells **5.** Flashing light **6.** Key switch **7.** Sensitive edges sensor

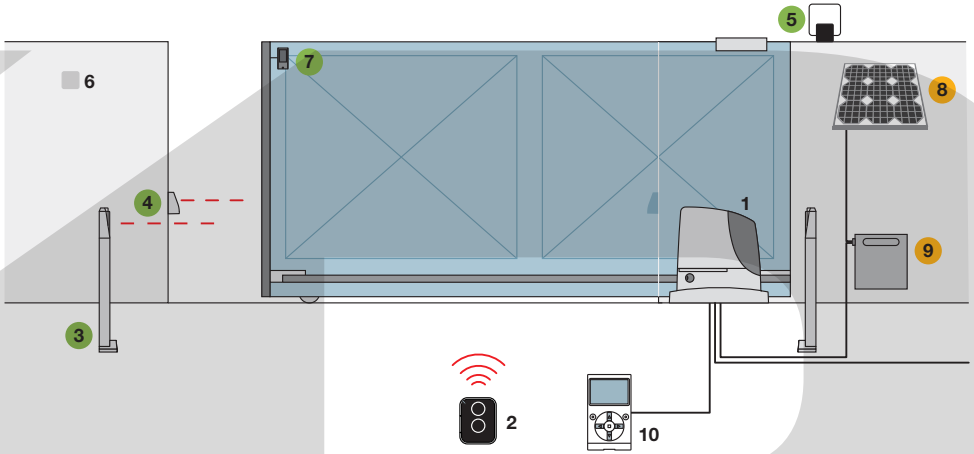

RUN 1500

1. Motor **2.** Transmitter **3.** Photocells mounted on posts **4.** Photocells **5.** Flashing light **6.** Key switch **7.** Sensitive edges sensor **8.** SYP solar panel **9.** PSY24 battery box **10.** O-View multifunction display
● Accessories also available for the **Solemyo Air Net System** wireless version
● **Solemyo** solar power accessories

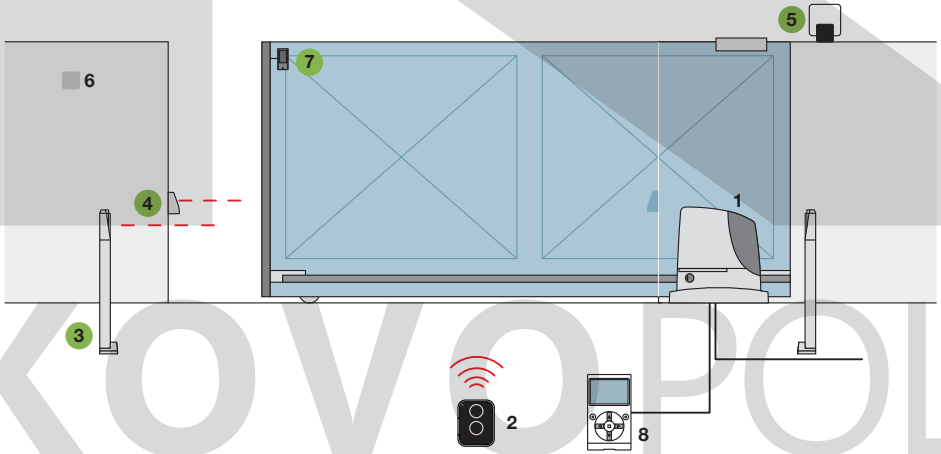

RUN 1800/2500

1. Motor **2.** Transmitter **3.** Photocells mounted on posts **4.** Photocells **5.** Flashing light **6.** Key switch **7.** Sensitive edges sensor **8.** O-View multifunction display
● Accessories also available for the **Solemyo Air Net System** wireless version

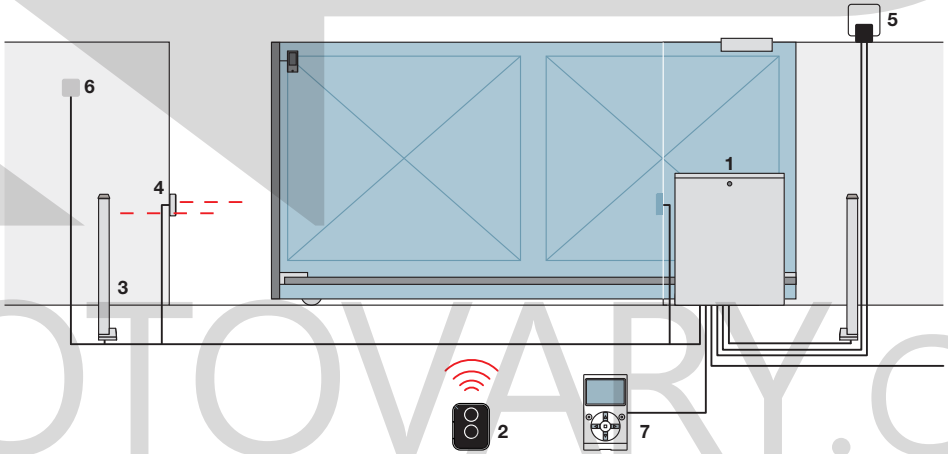

TUB

1. Motor **2.** Transmitter **3.** Photocells mounted on posts **4.** Photocells **5.** Flashing light **6.** Key switch **7.** O-View multifunction display

KOVOPOLOTOVARY.CZ

Barrier gate operators

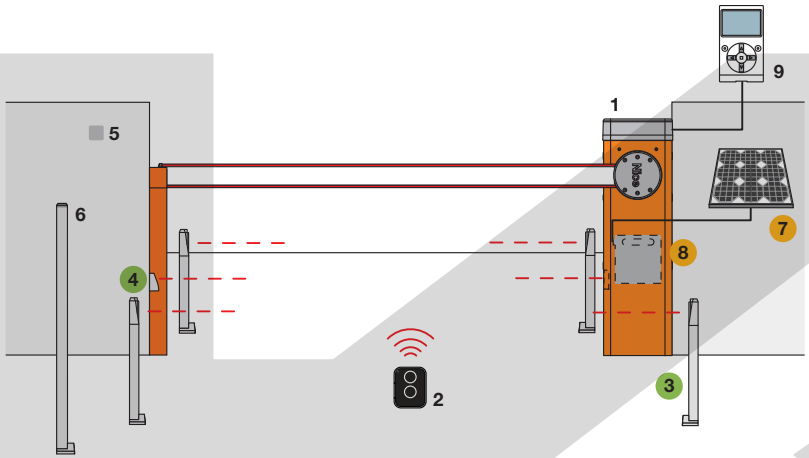

S-BAR

1. Motor **2.** Transmitter **3.** Photocells mounted on posts **4.** Photocells **5.** Digital or key switches **6.** Key-operated selector or digital on post **7.** SYP solar panel **8.** PSY24 battery box **9.** O-View multifunction display

- Accessories also available for the **Solemyo Air Net System** wireless version
- **Solemyo** solar power accessories

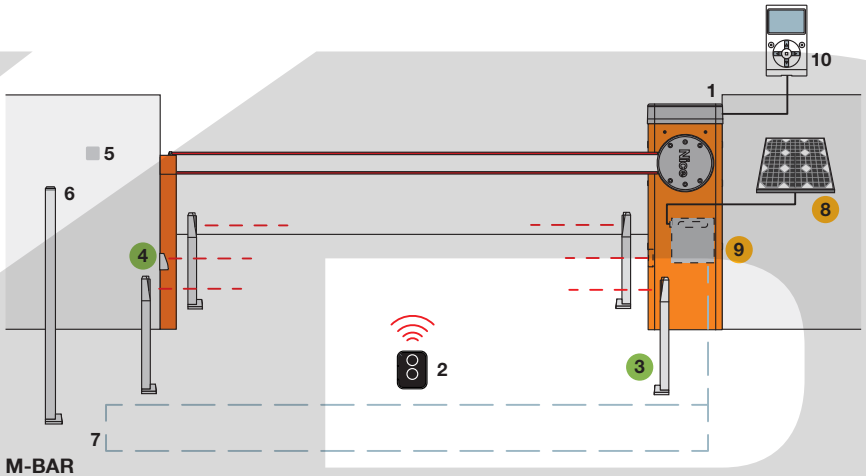

M-BAR

1. Motor **2.** Transmitter **3.** Photocells mounted on posts **4.** Photocells **5.** Digital or key switches **6.** Key-operated selector or digital on post **7.** Loop detector **8.** SYP solar panel **9.** PSY24 battery box **10.** O-View multifunction display

- Accessories also available for the **Solemyo Air Net System** wireless version
- **Solemyo** solar power accessories

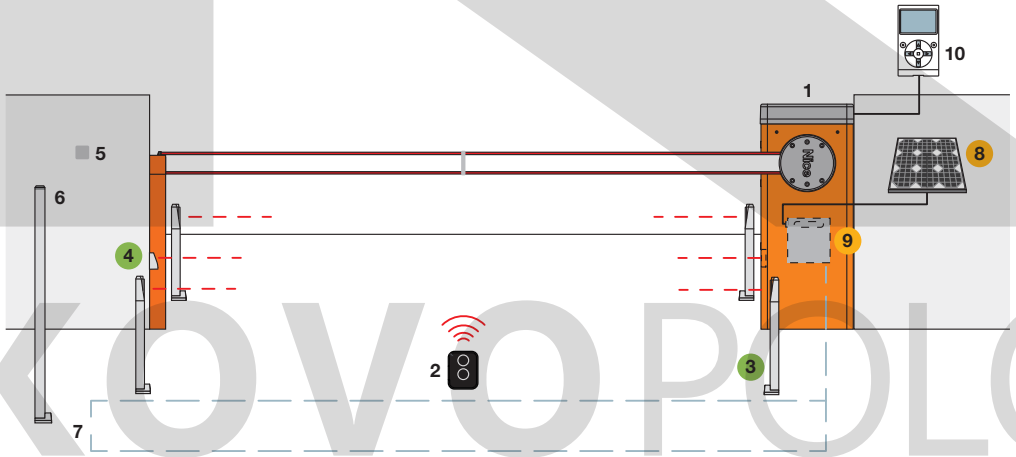

L-BAR

1. Motor **2.** Transmitter **3.** Photocells mounted on posts **4.** Photocells **5.** Digital or key switches **6.** Key-operated selector or digital on post **7.** Loop detector **8.** SYP solar panel **9.** PSY24 battery box **10.** O-View multifunction display

- Accessories also available for the **Solemyo Air Net System** wireless version
- **Solemyo** solar power accessories

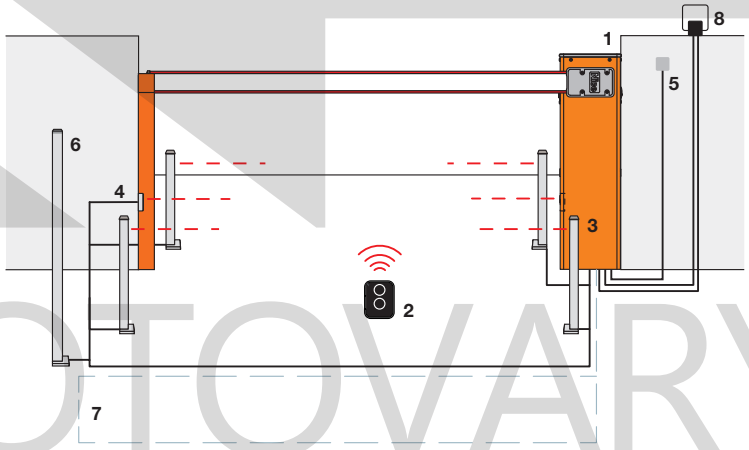

WIDE SYSTEM

1. Motor **2.** Transmitter **3.** Photocells mounted on posts **4.** Photocells **5.** Digital or key switches **6.** Key-operated selector or digital on post **7.** Loop detector **8.** Flashing light

KOVOPOLOTOVARY.CZ

For garage and industrial doors

Sectional

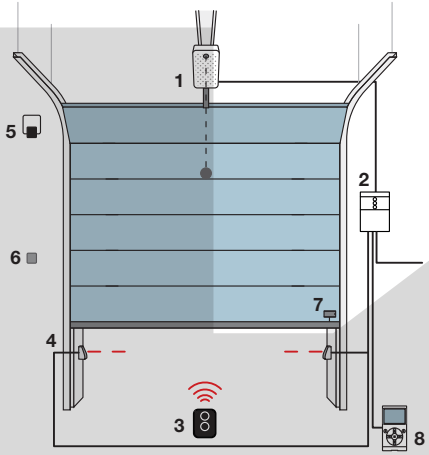

Non-projecting up-and-over door

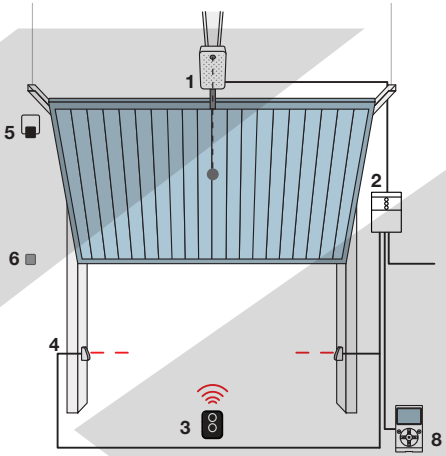

Projecting up-and-over door

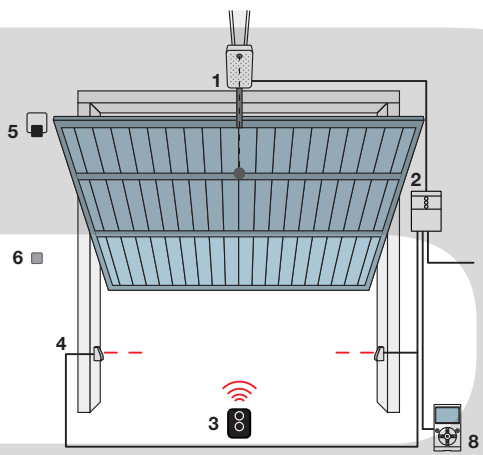

SPYKIT 550

1. Motor **2.** Control unit **3.** Transmitter **4.** Photocells **5.** Flashing light **6.** Digital or key switches
7. Sensitive edges sensor **8.** O-View multifunction display

Sectional

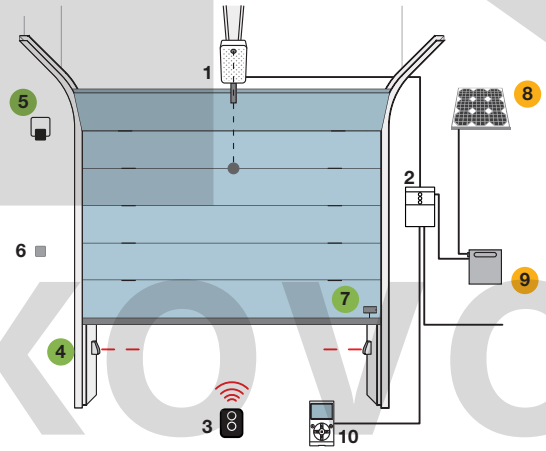

Non-projecting up-and-over door

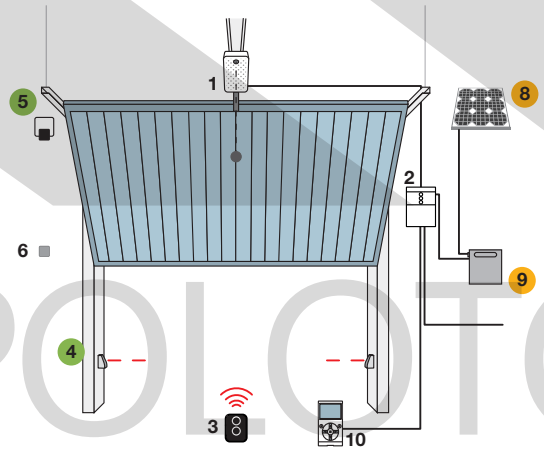

Projecting up-and-over door

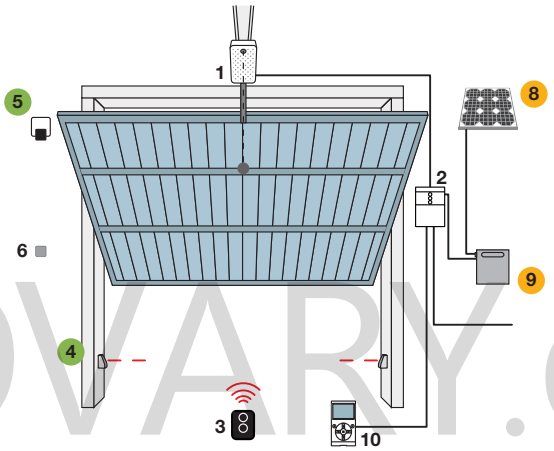

SPYKIT 650/800 BD

1. Motor **2.** Control unit **3.** Transmitter **4.** Photocells **5.** Flashing light
6. Digital or key switches **7.** Sensitive edges sensor **8.** SYP solar panel **9.** PSY24 battery box **10.** O-View multifunction display
● Accessories also available for the **Solemyo Air Net System** wireless version
● **Solemyo** solar power accessories

KOVO POLOTOVARY.CZ

Sectional

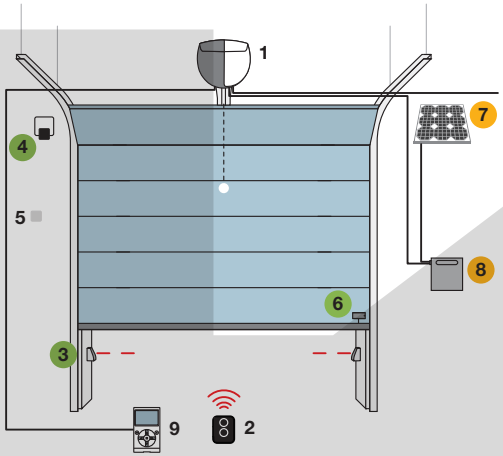

Non-projecting up-and-over door

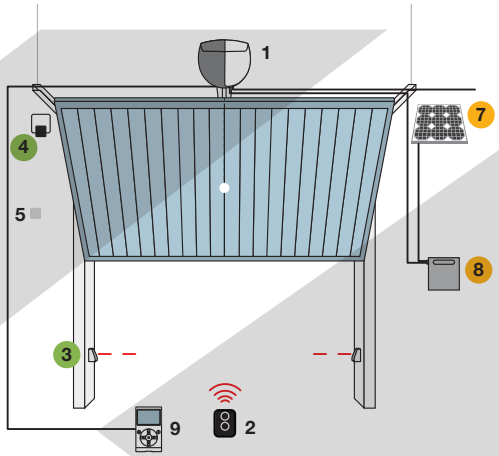

Projecting up-and-over door

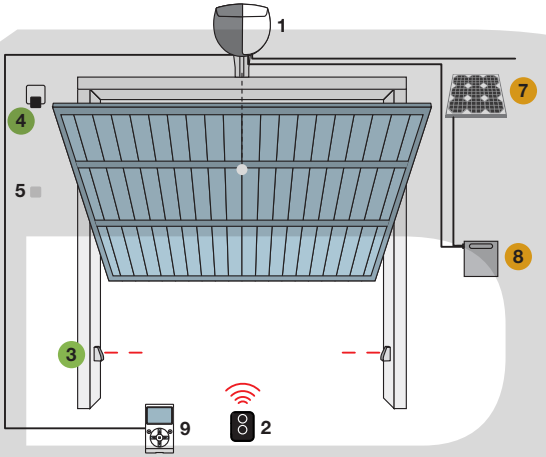

SPINBUS

1. Motor **2.** Transmitter **3.** Photocells **4.** Flashing light **5.** Digital or key switches
6. Sensitive edges sensor **7.** SYP solar panel **8.** PSY24 battery box **9.** O-View multifunction display
● Accessories also available for the **Solemyo Air Net System** wireless version
● **Solemyo** solar power accessories

Sectional

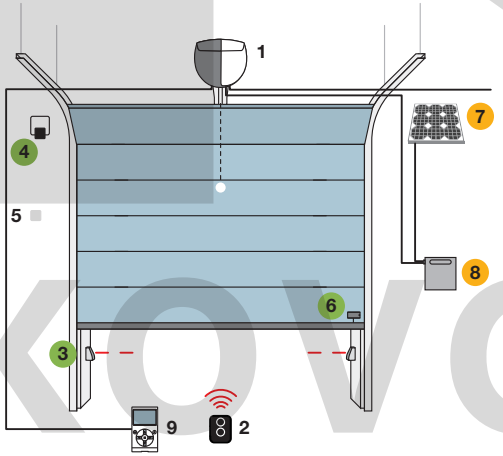

Non-projecting up-and-over door

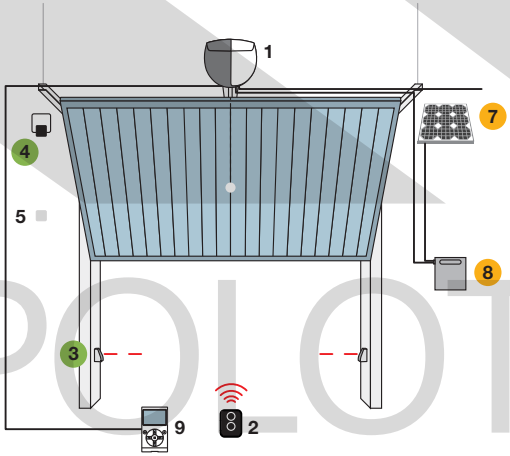

Projecting up-and-over door

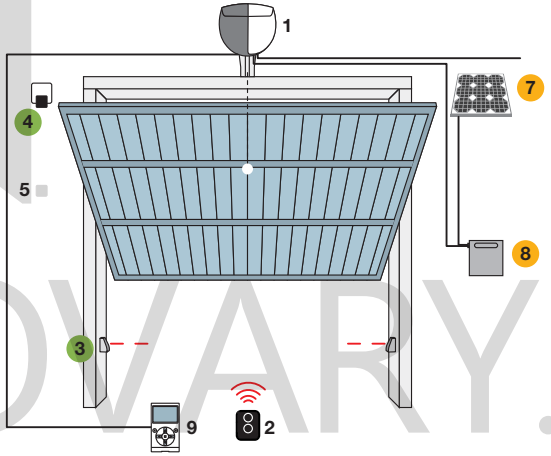

SPINBUSKIT 20/22/23 BD

1. Motor **2.** Transmitter **3.** Photocells **4.** Flashing light **5.** Digital or key switches
6. Sensitive edges sensor **7.** SYP solar panel **8.** PSY24 battery box **9.** O-View multifunction display
● Accessories also available for the **Solemyo Air Net System** wireless version
● **Solemyo** solar power accessories

KOVOPOLOTOVARY.CZ

Sectional

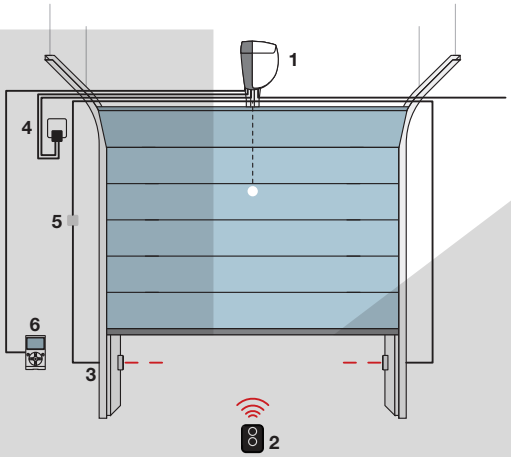

Non-projecting up-and-over door

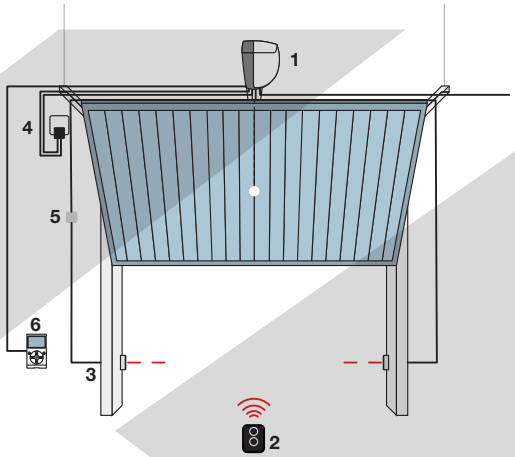

Projecting up-and-over door

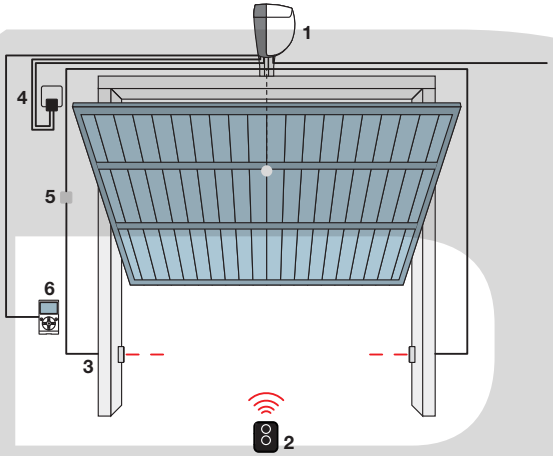

SPINKIT

1. Motor **2.** Transmitter **3.** Photocells **4.** Flashing light **5.** Digital or key switches
6. O-View multifunction display

Non-projecting up-and-over door

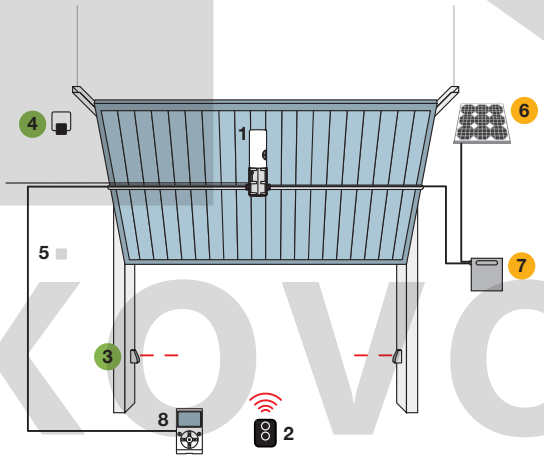

Projecting up-and-over door

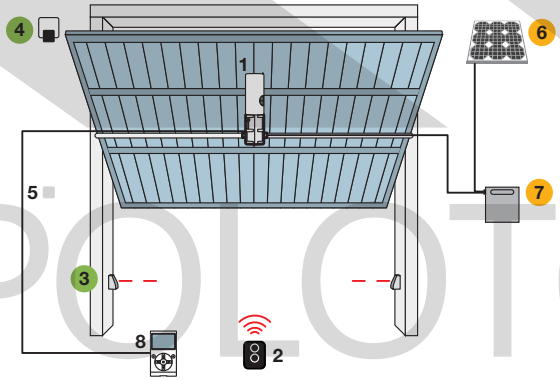

TEN

1. Motor **2.** Transmitter **3.** Photocells **4.** Flashing light **5.** Digital or key switches
6. SYP solar panel **7.** PSY24 battery box **8.** O-View multifunction display
● Accessories also available for the **Solemyo Air Net System** wireless version
● **Solemyo** solar power accessories

KOVOPOLOTOVARY.CZ

Non-projecting up-and-over door

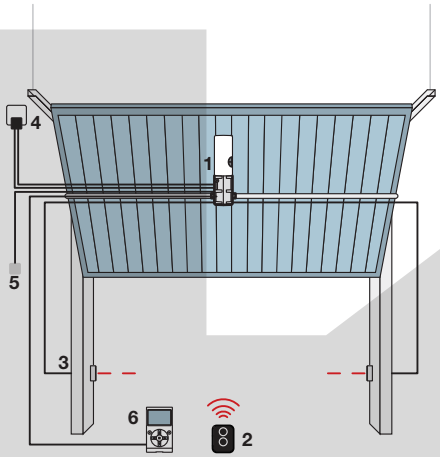

Projecting up-and-over door

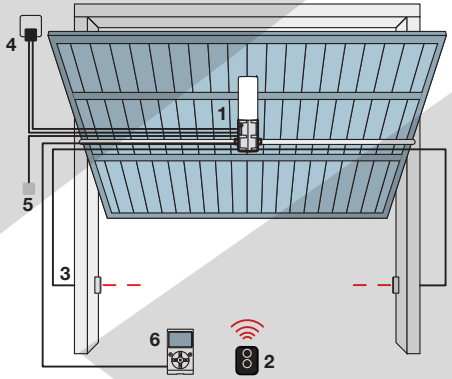

TENKIT

1. Motor **2.** Transmitter **3.** Photocells **4.** Flashing light **5.** Digital or key switches
6. O-View multifunction display

Sectional

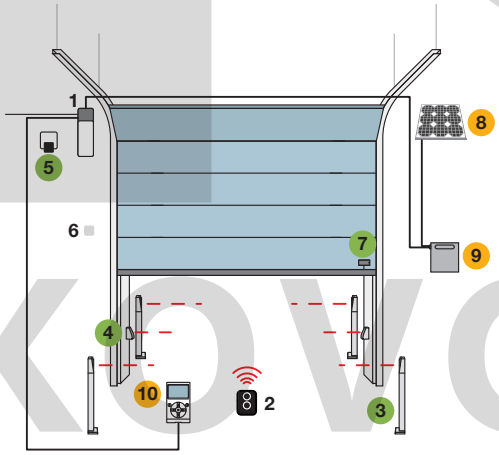

SOON

1. Motor **2.** Transmitter **3.** Photocells mounted on posts **4.** Photocells **5.** Flashing light **6.** Digital or key switches **7.** Sensitive edges sensor **8.** SYP solar panel
9. PSY24 battery box **10.** O-View multifunction display
● Accessories also available for the **Solemyo Air Net System** wireless version
● **Solemyo** solar power accessories

Sectional

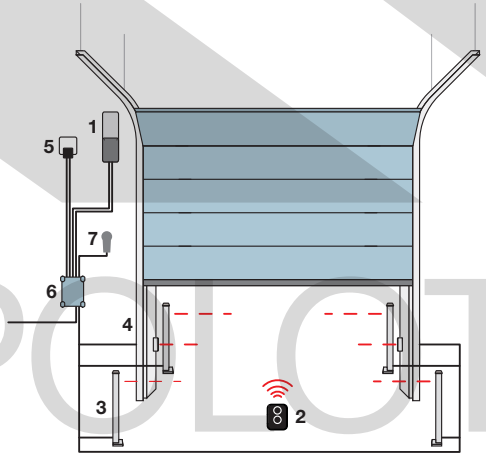

SUMO

1. Motor **2.** Transmitter **3.** Photocells mounted on posts **4.** Photocells **5.** Flashing light
6. Control unit **7.** Digital or key switches

Two-wings sliding doors

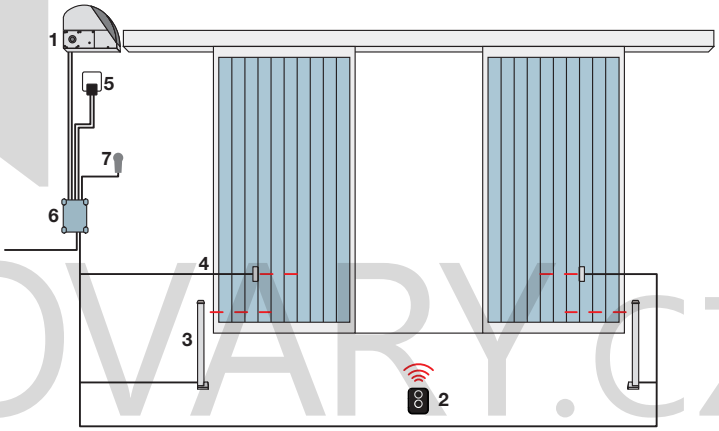

KOVOPOLOTOVARY.CZ

Folding 2-leaf doors

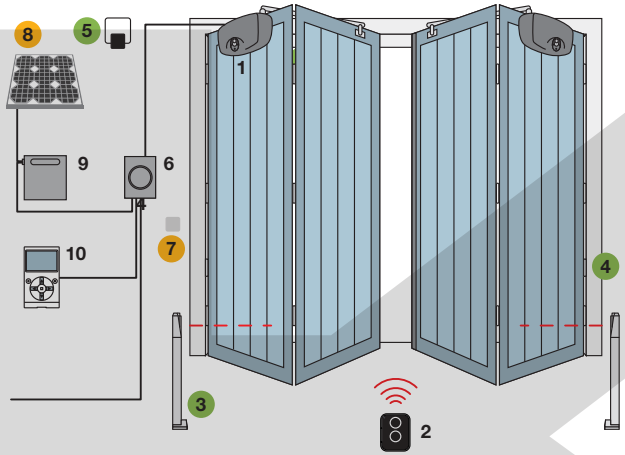

HYPPO 7100

1. Motor **2.** Transmitter **3.** Photocells mounted on posts **4.** Photocells
5. Flashing light **6.** Control unit **7.** Digital or key switches **8.** SYP solar panel
9. PSY24 battery box (only for HY7124) **10.** O-View multifunction display
● Accessories also available for the **Solemyo Air Net System** wireless version
● **Solemyo** solar power accessories

Balanced rolling doors

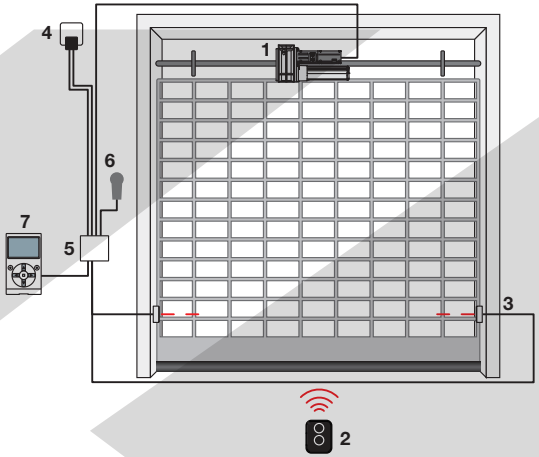

GIRO

1. Motor **2.** Transmitter **3.** Photocells **4.** Flashing light **5.** Control unit **6.** Digital or key switches **7.** O-View multifunction display

Balanced rolling doors

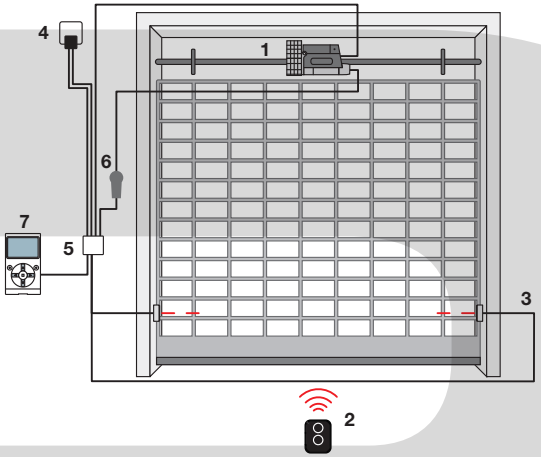

RONDO

1. Motor **2.** Transmitter **3.** Photocells **4.** Flashing light **5.** Control unit **6.** Digital or key switches **7.** O-View multifunction display

KOVOPOLOTOVARY.CZ

Compatibility guide for automation systems

Systems for swing gates

Motor	Moonclever control unit		Spare code	Receiver	Transmitter	Photocells	Flashing light
WG4024, WG5024, WG2024, WG3524	MC424L	Bidi Yubii SOLEMYO OPERA 24V	MCA2	OXI, OXIBD, OXILR	ERA INTI, ERA ONE, ERA ONE BD, ERA ONE LR, ERA FLOR, NICEWAY, FLOR-S, FLOR-M, FLO, ONE, SMILO, VERY VR, VERY VE	EPS, EPM, EPL, F210, FT210, EPMOR, MOF, BF, FK, FE, FI	ELDC, EL24, ML24, ML24T, LUCY24
SFAB2024							
TOO3024, TOO4524							
TO4024, TO5024, TO7024, TO5024I	MC824H	Bidi Yubii SOLEMYO OPERA 24V	MCA1			EPSB, EPMB, EPLB, F210B, EPMOW, MOFB	ELDC, WLT, ELB, MLB, MLBT
HY7024, HY7124							
SFAB2124							
TO6024HS, TO5024HS							
MFAB3024HS, MFAB3024							
WG3524HS							
LFAB4024, LFAB4024HS							
BFAB5024							
TTN3724HS, TTN6024HS							
TO5624I	MC824HR	Bidi Yubii OPERA BLUEBUS 24V	MCA3				
TTN3724RHS, TTN6024RHS							
OLTRE1824	MC824L	SOLEMYO OPERA BLUEBUS 24V	MCA4				
TO4005, TO4006, TO4015, TO4605, TO5015, TO5016, TO5605, HY7100, HY7005, WG4000, WG5000, MFAB3000, MFAB3000L, LFAB4000, TOO3000, TOO4500	MC800	Bidi Yubii OPERA BLUEBUS 230V	MCA5				ELAC, EL, ML, MLT, LUCY

Motor with articulated arm	Built-in control unit / Spare code		Receiver	Transmitter	Photocells	Flashing light
PP7024	POA1	24V	OXI, OXIBD, OXILR	ERA INTI, ERA ONE, ERA ONE BD, ERA ONE LR, ERA FLOR, NICEWAY, FLOR-S, FLOR-M, FLO, ONE, SMILO, VERY VR, VERY VE	EPS, EPM, EPL, EPMOR, MOF, BF, FK, FE, FI	ELDC, EL24, ML24, ML24T, LUCY24
WL1024C	WLA1	Bidi Yubii SOLEMYO OPERA BLUEBUS 24V			EPSB, EPMB, EPLB, F210B, EPMOW, MOFB	ELDC, WLT, ELB, MLB, MLBT
HO7124, PP7124	POA3	Bidi Yubii SOLEMYO OPERA BLUEBUS 24V				
HK7024	HKA2	Bidi Yubii SOLEMYO OPERA BLUEBUS 24V				
HK7024HS	HKA2	Bidi Yubii SOLEMYO OPERA BLUEBUS 24V				

KOVOPOLOTOVARY.CZ

■ Code included in the Gate&Door catalogue 2019-2020

■ Code not included in the catalogue

Systems for sliding gates

Motor	Built-in control unit / Spare code		Receiver	Transmitter	Photocells	Flashing light
RO300	ROA34	230V	OXI, OXIBD, OXILR	ERA INTI, ERA ONE, ERA ONE BD, ERA ONE LR, ERA FLOR, NICEWAY, FLOR-S, FLOR-M, FLO, ONE, SMILO, VERY VR, VERY VE	EPS, EPM, EPL, F210, FT210, MOF, BF, FK, FE, FI	ELAC, ML, MLT, LUCY, LL
RO1000, RO1020	ROA3	230V	FLOXIR, FLOXI2R*	ERA INTI, ERA ONE, ERA FLOR, NICEWAY, FLOR-S, FLOR-M, ONE, VERY VR		
RO1010	ROA4	230V				ELDC, EL24, ML24, ML24T
RO1124	ROA2	24V				
RO500, RO1070, TH1500	ROA37	230V	Built-in*	ERA INTI, ERA ONE, ERA FLOR, NICEWAY, FLOR-S, FLOR-M, FLO, ONE, SMILO, ERGO, PLANO, VERY VR		ELAC, ML, MLT, LUCY, LL
TH1551	THA5	230V	FLOXIR, FLOXI2R*	ERA INTI, ERA ONE, ERA FLOR, NICEWAY, FLOR-S, FLOR-M, ONE, VERY VR		
TH2251	THA6	230V	FLOXIR, FLOXI2R*			
ROX600	ROA40	230V OPERA	Built-in*	ERA INTI, ERA ONE, ERA FLOR, NICEWAY, FLOR-S, FLOR-M, FLO, ONE, SMILO, VERY VR, VERY VE		ELAC
RD400	RBA4	24V	Built-in*			ELDC
RB350	RBA2	BLUEBUS 24V	OXI, OXIBD, OXILR	ERA INTI, ERA ONE, ERA ONE BD, ERA ONE LR, ERA FLOR, NICEWAY, FLOR-S, FLOR-M, FLO, ONE, SMILO, VERY VR, VERY VE	EPSB, EPMB, EPLB, F210B, FT210B, EPMOW, MOFB	ELDC, ELB, WLT, MLB, MLBT
NKSL400	NKA3	Bidi Yubii SOLEMYO OPERA BLUEBUS 24V				
SLH400						
RB400	RBA3	Bidi Yubii SOLEMYO OPERA BLUEBUS 24V				
RB600						
RB1000						
RUN1500						
RUN1800	RUA1	Bidi Yubii OPERA BLUEBUS 230V				
RUN2500						
RUN2500I	RUA2 + RUA3	Bidi Yubii OPERA BLUEBUS 230V				
RB250HS, RB500HS	RBA3/HS	Bidi Yubii SOLEMYO OPERA BLUEBUS 24V				
RUN400HS, RUN1200HS	RUA6	Bidi Yubii OPERA BLUEBUS 24V				
TUB4000	DPRO500	Bidi Yubii OPERA 400V			EPS, EPM, EPL, F210, FT210,EPMOR, MOF, BF, FK, FE, FI	ELAC, EL, ML, MLT, LUCY
TUB3500	MINDY A500		FLOXIR, FLOXI2R*	ERA INTI, ERA ONE, ERA FLOR, NICEWAY, FLOR-S, FLOR-M, ONE, VERY VR	EPS, EPM, EPL, F210, FT210, MOF, BF, FK, FE, FI	
			FLOXI	FLO, VERY VE		

* Radio receiver incompatible with Opera system

KOVOPOLOTOVARY.CZ

Systems for garage doors and rolling doors

	Motor	Built-in control unit / Spare code		Receiver	Transmitter	Photocells	Flashing light
Sectional doors	SP6000	SPA40	24V	OXI, OXIBD, OXILR	ERA INTI, ERA ONE, ERA ONE BD, ERA ONE LR, ERA FLOR, NICEWAY, FLOR-S, FLOR-M, FLO, ONE, SMILO, VERY VR, VERY VE	EPS, EPM, EPL, F210, FT210, EPMOR, MOF, BF, FK, FE, FI	ELDC, EL24, ML24, ML24T
	SP6065	SPA20	24V	FLOXI2R*, FLOXIR	ERA INTI, ERA ONE, ERA FLOR, NICEWAY, FLOR-S, FLOR-M, ONE, VERY VR		
				FLOXI	FLO, VERY VE		
	SP6100	SPA30	24V	FLOXI2R*, FLOXIR	ERA INTI, ERA ONE, ERA FLOR, NICEWAY, FLOR-S, FLOR-M, ONE, VERY VR		
				FLOXI	FLO, VERY VE		
	CR2124	ROA2	24V	FLOXI2R*, FLOXIR	ERA INTI, ERA ONE, ERA FLOR, NICEWAY, FLOR-S, FLOR-M, ONE, VERY VR		
				FLOXI	FLO, VERY VE		
	SN6011	SNA1	SOLEMYO OPERA 24V	Built-in*	ERA INTI, ERA ONE, ERA FLOR, NICEWAY, FLOR-S, FLOR-M, FLO, ONE, SMILO, VERY VR, VERY VE		ELDC, WLT, ELB, MLB, MLBT, LUCYB
	SN6021	SNA20	Bidi Yubii SOLEMYO OPERA BLUEBUS 24V	OXI, OXIBD, OXILR	ERA INTI, ERA ONE, ERA ONE BD, ERA ONE LR, ERA FLOR, NICEWAY, FLOR-S, FLOR-M, FLO, ONE, SMILO, VERY VR, VERY VE	EPSB, EPMB, EPLB, F210B, FT210B, EPMOW, MOFB	
	SN6031, SPIN30	SNA3	Bidi Yubii SOLEMYO OPERA BLUEBUS 24V				
	SN6041, SPIN40	SNA4	Bidi Yubii SOLEMYO OPERA BLUEBUS 24V				
	SO2000	SOA2	Bidi Yubii SOLEMYO OPERA BLUEBUS 24V				
	SU2000, SU2000V, SU2000VV, SU2010	DPRO924	Bidi Yubii SOLEMYO OPERA BLUEBUS 24V			EPS, EPM, EPL, F210, FT210, EPMOR, MOF, BF, FK, FE, FI	ELDC, EL24, ML24, ML24T
	SHEL75KCE, SHEL50KCE, SHEL60KCE	OGA0	24V	Built-in*	ERA INTI, ERA ONE, ERA FLOR, NICEWAY, FLOR-S, FLOR-M, FLO, ONE, SMILO, VERY VR, VERY VE		-
	SPY650BDKCE, SPY800BDKCE	SPYBOX B	Bidi Yubii SOLEMYO OPERA BLUEBUS 24V	OXI, OXIBD, OXILR + Built-in*	ERA INTI, ERA ONE, ERA ONE BD, ERA ONE LR, ERA FLOR, NICEWAY, FLOR-S, FLOR-M, FLO, ONE, SMILO, VERY VR, VERY VE	EPSB, EPMB, EPLB, F210B, FT210B, EPMOW, MOFB	ELDC, WLT, ELB, MLB, MLBT, LUCYB
	SPY650HSBDKCE	SPYBOXHS	Bidi Yubii SOLEMYO OPERA BLUEBUS 24V	OXI, OXIBD, OXILR + Built-in*	ERA INTI, ERA ONE, ERA ONE BD, ERA ONE LR, ERA FLOR, NICEWAY, FLOR-S, FLOR-M, FLO, ONE, SMILO, VERY VR, VERY VE	EPSB, EPMB, EPLB, F210B, FT210B, EPMOW, MOFB	ELDC, WLT, ELB, MLB, MLBT, LUCYB
	SPY550KCE	SPYBOX	OPERA 24V	Built-in*	ERA INTI, ERA ONE, ERA FLOR, NICEWAY, FLOR-S, FLOR-M, ONE, VERY VR	EPS, EPM, EPL, F210, FT210, EPMOR, MOF, BF, FK	ELDC, WLT, EL24, ML24, ML24T, LUCY24
Up-and-over doors	OT21, OT21FC	OTA1	24V	FLOXI2R*, FLOXIR	ERA INTI, ERA ONE, ERA FLOR, NICEWAY, FLOR-S, FLOR-M, ONE, VERY VR	EPS, EPM, EPL, F210, FT210, EPMOR, MOF, BF, FK	ELAC, EL, ML, MLT, LUCY
				FLOXI	FLO, VERY VE		
	TN2010L, TN2010	TNA2	Bidi Yubii SOLEMYO OPERA BLUEBUS 24V	OXI, OXIBD, OXILR	ERA INTI, ERA ONE, ERA ONE BD, ERA ONE LR, ERA FLOR, NICEWAY, FLOR-S, FLOR-M, FLO, ONE, SMILO, VERY VR, VERY VE	EPSB, EPMB, EPLB-F210B, FT210B, EPMOW, MOFB	ELDC, WLT, ELB, MLB, MLBT
	TN2030L, TN2030, TNLKCE, TNKCE	TNA1	SOLEMYO OPERA 24V	Built-in*	ERA INTI, ERA ONE, ERA FLOR, NICEWAY, FLOR-S, FLOR-M, FLO, ONE, SMILO, VERY VR, VERY VE	EPS, EPM, EPL, F210, FT210, EPMOR, MOF, BF, FK, FE, FI	
Rolling	GR170, GR170E01, GR170R, GR170RE01, GR340E01	MC200	OPERA 230V	Built-in*	ERA INTI, ERA ONE, ERA FLOR, NICEWAY, FLOR-S, FLOR-M, FLO, ONE, SMILO, VERY VR, VERY VE	EPS, EPM, EPL, F210, FT210, EPMOR, MOF, BF, FK, FE, FI	ELAC, EL, ML, MLT, LUCY
	RN2010, RN2020, RN2030, RN2040		OPERA 24V				

* Radio receiver incompatible with Opera system

KOVOPOLOVARY.CZ

Barrier gate operator systems

Motor	Built-in control unit / Spare code		Receiver	Transmitter	Photocells	Flashing light
WIL	WA20	24V	OXI, OXIBD, OXILR	ERA INTI, ERA ONE, ERA ONE BD, ERA ONE LR, ERA FLOR, NICEWAY, FLOR-S, FLOR-M, FLO, ONE, SMILO, VERY VR, VERY VE	EPS, EPM, EPL, F210, FT210,EPMOR MOF, BF, FK, FE, FI	ELDC, EL24, ML24, ML24T
WIDE	WIA20	24V				
SIGNO (all models)	SIA20	24V				
XBAR	XBA2	24V			EPSB, EPMB, EPLB- F210B, FT210B,EPMOW, MOFB	ELDC, WLT, ELB, MLB, MLBT
S4BAR	XBA20	Bidi Yubii SOLEMYO OPERA BLUEBUS 24V				
MBAR	BCU1	Bidi Yubii SOLEMYO OPERA BLUEBUS 24V				
L9BAR						

WIL barriers produced before 2008 have MOLEX radio plug

Systems for gates and garage doors with Mindy control units

Control unit	Spare code	Motor	Receiver	Transmitter	Photocells	Flashing light
A01	139-B.8001	GR170, GR340, RN2030, RN2040, RN2010, RN2020	Built-in*	ERA INTI, ERA ONE, ERA FLOR, NICEWAY, FLOR-S, FLOR-M,FLO, ONE, SMILO, ERGO, PLANO, VERY VR, VERY VE	EPS, EPM, EPL, F210, FT210, EPMOR, MOF, BF, FK, FE, FI	
A02	200-A.8001					ELAC, EL, ML, MLT, LUCY
A0, A1, A1B	-	OT20, RO1030	FLOXI2R*, FLOXIR	ERA INTI, ERA ONE, ERA FLOR, NICEWAY, FLOR-S, FLOR-M, ONE, VERY VR		ELAC, EL, ML, MLT, LUCY
A3, A3F, A6, A6F, A700F	A3BA + A3GO A3FBA + A3GO SPSB059DE SPSB059DEF SPSB059DF	TO4005, TO4006, TO4015, TO4605, TO5015, TO5016, TO5605, HY7100, HY7005, WG4000, WG5000, MFAB3000, MFAB3000L, LFAB4000, TOO3000, TOO4500				
A400	102-A.8001	WG4000	OXI, OXIBD, OXILR, SMXI*, SMXIS*	ERA INTI, ERA ONE, ERA ONE BD, ERA ONE LR, ERA FLOR, NICEWAY, FLOR-S, FLOR-M, FLO, ONE, SMILO, VERY VR, VERY VE		
A100F	129-A.8001	OT20, RO1030				
A60	SPSB138D	TO4005, TO4006, TO4015, TO4605, TO5015, TO5016, TO5605, HY7100, HY7005, WG4000, WG5000, MFAB3000, MFAB3000L, LFAB4000, TOO3000, TOO4500				
A500	096-B.8001		FLOXI2R*, FLOXIR	ERA INTI, ERA ONE, ERA FLOR, NICEWAY, FLOR-S, FLOR-M, FLO, ONE, VERY VR, VERY VE		ELDC, EL24, ML24, ML24T, LUCY24
A824 24V	SP081-B	MB4024, MB5024, HY7024, HY7124, MFAB3024				
A824T 24V		TO4024, TO5024, TO7024				
A924 24V	SB105B	SU2000, SU2000V, SU2000VV, SU2010				

* Radio receiver incompatible with Opera system

KOVOPOLOTOVARY.CZ

Alphabetical index

Code	Product line	Page
ABF	Tuned directional aerial, for mounting on bracket	188
ACNPS01	DIN module for NicePass access control	206
ALA1	Battery charger power supply unit	196
BCU1	Spare control unit for M-Bar and L-Bar	121
BFAB5024	Big-Fab, Motor for swing gates, underground installation, with leaves up to 5 m, with mechanical limit switch on closing	87
BFABBOX	Fab accessory, Foundation box with cataphoresis paint finish	87
BFABBOXI	Fab accessory, Stainless steel foundation box	87
BM1000	Additional memory card (255 codes memory)	223
BMA1	L-Fab and Big-Fab accessory, Accessory for opening up to 360°	31
BMA2	L-Fab and Big-Fab accessory, Adapters for the installation of two motors	85
BMA3	Lever-type key unlock system	31
CABLA01	Cable for connecting O-Box to the computer	196
CABLA02	Optical reader for programming transmitters Bio and FloR	196
CABLA03	Cable for cloning transmitters in the series Very	196
CABLA04	Cable for cloning transmitters in the series FloR	196
CABLA05	Cable for programming tubular motors, equipped with port TTBUS	196
CABLA06	Cable for programming receivers universal in the series SMX and OX	190
CABLA07	Cable for cloning transmitters in the series Ergo and Plano	196
CABLA09	Cable for cloning transmitters in the series Era-Flor	196
CB	Mechanical sensitive edges - protective rubber pad	233
CHEU	Neutral key for EKSEU, EKSIEU	222
CHS	Neutral key for EKS, EKSI	222
CM-B	Mechanical sensitive edges, length 1.5 m	105
CMA 1,5MT	Mechanical sensitive edges, length 1.7 m	233
CMA 1,7MT	Mechanical sensitive edges, length 2 m	233
CMA 2,5MT	Pawl with two metal release keys	233
CMA 2MT	Mechanical sensitive edges, length 2.5 m	233
CMBK4	Kit for installing a low mechanical edge, with aluminium profiles measuring 4 m (to use together with CB)	233
CMBK6	Kit for installing a low mechanical edge, with aluminium profiles measuring 6 m (to use together with CB)	233
CORE	Nice Wi-Fi-Radio Gateway	172
CRA1	Mechanical accessory, shaft with 18-tooth pinion	159
CRA2	Mechanical accessory, joint for chain	159
CRA3	Mechanical accessory, 1/2" chain, 1 m pack, plus joint for chain	159
CRA4	Mechanical accessory, 1/2" chain, 5 m pack, plus joint for chain	159
CRA5	Mechanical accessory, tensioner drive with brackets	159
CRA6	Mechanical accessory, 36-tooth pinion	159
CRA7	Mechanical accessory, 18-tooth pinion	159
CRA8	Mechanical accessory, wall-fixing bracket	159
CRA9	Mechanical accessory, adapter for shafts	157
DBM10	Complete kit for electrical connection of sensitive edges, for gates up to 10 m	232
DBM5	Complete kit for electrical connection of sensitive edges, for gates up to 5 m	232
DBM7,5	Complete kit for electrical connection of sensitive edges, for gates up to 7.5 m	232
DPCU1	Spare control unit for DPRO924	247
DPRO500	Control unit for 230 Vac, 2.2 kW single phase motor, or 400 Vac, 2.2 kW three phase motor	246
DPRO924	Control unit for 24V motor (suitable for Sumo), with provision for Solemyo and Opera	247
EDS	Era Keypad, digital selector 12 keys to be combined with the MORX decoder	220
EDSB	Era Keypad, 12 key digital selectors with nice BlueBUS technology, burglar-resistant metal body	220
EDSI	Era Keypad, 12 key digital selectors with nice BlueBUS technology, for recessed mounting burglar-resistant metal body	220

KOVOPOLOTOVARY.CZ

Code	Product line	Page
EDSIB	Era Keypad, digital selector 12 keys, for recessed mounting, to be combined with the MORX decoder	220
EDSWG	Era Keypad wireless, 13 key digital selector, with radio connection	221
EKA01	Era Post, plug for mounting of EKS, EKSEU, EDS, EDSB, EDSW, ETP, ETPB, on PPH2 post	225
EKA02	Finishing kit for EDSI, EDSIB, EKSI, EKSIEU installation	220
EKA03	Bowl for recessed mounting (depth 66 mm) for installation of EKSI, EKSIEU. also compatible with EPLIO, EPLIOB, EDSI, EDSIB	219
EKS	Key selector Era series, for outdoor installation	222
EKSEU	Key selector Era series, European cylinder, for outdoor installation	222
EKSI	Era Key Switch, key selector for recessed mounting	222
EKSIEU	Key selector Era series, European cylinder, for recessed mounting	222
ELAC	Flashing LED signal light, neutral, 90-240 Vac, for compatible control units	226
ELDC	Flashing LED signal light, neutral, 12-36 Vdc, for compatible control units	226
ELMM	LED light module for EPMOR	217
EPL	Era Photocell L, pair of surface-mounted photocells Large	219
EPLB	Era Photocell L, pair of surface-mounted photocells large, 30° positionable	219
EPLIO	Era Photocell L, pair of surface-mounted photocells large, 30° positionable, with Nice BlueBUS technology	219
EPLIOB	Era Photocell L, pair of surface-mounted photocells large, with Nice BlueBUS technology	219
EPLO	Era Photocell L, pair of photocells large for recessed mounting, 30° positionable	219
EPLOB	Era Photocell L, pair of photocells large for recessed mounting, 30° positionable, with Nice BlueBUS technology	219
EPM	Era Photocell M, pair of outdoor photocells	217
EPMA	Era Photocell M, pair of outdoor photocells, 30° positionable	217
EPMAB	Era Photocell M, pair of outdoor photocells, 30° positionable, with Nice BlueBUS technology	217
EPMAO	Era Photocell M, pair of outdoor photocells, burglar-resistant metal body	217
EPMAOB	Era Photocell M, pair of outdoor photocells, 30° positionable, burglar-resistant metal body	217
EPMB	Era Photocell M, pair of outdoor photocells, 30° positionable, burglar-resistant metal body, with Nice BlueBUS technology	217

Code	Product line	Page
EPMO	Era Photocell M, pair of outdoor photocells, burglar-resistant metal body, with Nice BlueBUS technology	217
EPMOB	Era Photocell M, pair of outdoor photocells, with Nice BlueBUS technology	217
EPMOR	Era Photocell M, surface-mounted reflective photocell + reflective mirror 1	217
EPMOW	Era Photocell M, pair of self-synchronised surface-mounted wireless photocells	217
EPS	Era Photocell S, pair of outdoor photocells Slim	215
EPSA	Era Photocell S, pair of outdoor photocells slim, burglar-resistant metal body	215
EPSAB	Era Photocell S, pair of outdoor photocells slim, with Nice BlueBUS technology, burglar-resistant metal body	215
EPSB	Era Photocell S, pair of outdoor photocells slim, with Nice BlueBUS technology	215
ERA P VIEW	Multifunction radio transmitter with intuitive graphic interface, to manage up to 99 devices singly or in groups	178
ETP	Proximity reader for transponder cards MOCARD and MOCARDP to be combined with the MORX decoder	223
ETPB	Era Transpoder Reader, proximity reader for transponder cards with Nice BlueBUS technology	223
ETWI	Interface with Wiegand 26303437 protocol for use with a radio control device with Nice Pass	206
F210	Pair of synchronised photocells, with relay output	235
F210B	Pair of synchronised photocells, with the Nice BlueBUS technology	235
FA1	Vandal-proof metal shell for optical devices	234
FA2	Bracket for fixing vandal-proof metal shell to PPH2 and PPH1 columns	234
FLO1RCE	Era FloR transmitter, 1 channel, with sequential code for multiple insertion	183
FLO1RE	Era FloR transmitter, 1 channel	183
FLO2RCE	Era FloR transmitter, 2 channels, with sequential code for multiple insertion	183
FLO2RE	Era FloR transmitter, 2 channels	183
FLO4RCE	Era FloR transmitter, 4 channels, with sequential code for multiple insertion	183
FLO4RE	Era FloR transmitter, 4 channels	183
FT210	Pair of optical devices for sensitive edges, with relay output	234
FT210B	Pair of optical devices for sensitive edges, with BlueBUS technology	234

KOVOPOLOTOVARY.CZ

Alphabetical index

Code	Product line	Page
FTA1	7 Ah battery kit for FT210/FT210B transmitters, for intensive use	234
FTA2	2 Ah battery kit for FT210/FT210B transmitters	234
GR170	Giro, Irreversible gear motor, with brake and release device, lifting force up to 170 kg	165
GR170E01	Giro, Irreversible gear motor, with brake and release device, lifting force up to 170 kg, power supply cable included	165
GR170R	Giro, Reversible gear motor, without brake, lifting force up to 170 kg	165
GR170RE01	Giro, Reversible gear motor, without brake, lifting force up to 170 kg, power supply cable included	165
GR340E01	Giro, Irreversible gear motor, bi-motor with brake and release device, lifting force up to 340 kg, power supply cable included	165
GRA01	Giro accessory, second motor for GR170 complete with accessories for simultaneous release	165
GRA02	Giro accessory, adapter for 48 mm diameter shafts	165
GRA03	Giro accessory, adapter for 240 mm diameter pinion	165
HK7024	Hyke, Motor for swing gates up to 3.5 m, with articulated arm and control unit	71
HK7024HS	Hyke HS, Hi-Speed motor for swing gates up to 3 m, with magnetic encoder, complete with articulated arm and control unit	27
HK7224	Hyke, Motor for swing gates up to 3.5 m, with articulated arm	71
HK7224HS	Hyke HS, Hi-Speed motor for swing gates up to 3 m, with articulated arm, without built-in control unit	27
HKA2	Hyke HS accessory, Spare control unit for HK7024HS	27
HO7124	Hopp, Motor for swing gates up to 2.4 m, with articulated arm and control unit	67
HO7224	Hopp, Motor for swing gates up to 2.4 m, with articulated arm, without control unit	67
HOPPBDKCE	Hopp, Kit for swing gates with a leaf length of up to 2.4 m, surface mounted, bidirectional. **Contains:** 1 x HO7124 + HO7224, 2 x ON3EBD, 1 x OXIBD, 1 x EPMB, 1 x ELDC	69
HSB1	Trasponder badge for proximity reader	223
HY7005	Hyppo, Motor for swing gates up to 3 m, articulated shear-proof arm, with limit switch on opening and closing	75
HY7024	Hyppo, Motor for swing gates up to 3 m, with magnetic encoder, with shear-proof articulated arm	75
HY7100	Hyppo, Motor for folding 2-leaf doors, 230 Vac, with telescopic arm and limit switch on opening and closing	161
HY7124	Hyppo, Motor for folding 2-leaf doors, with telescopic arm and limit switch on opening and closing, with magnetic encoder	161
HYA11	Hyppo, Unlock from inside with a 6 m cord	161

Code	Product line	Page
HYA12	Hyppo, Longer articulated arm	75
HYKEBDKCE	Hyke, Kit for swing gates with a leaf length of up to 3.5 m, with articulated arm, surface mounted, bidirectional. **Contains:** 1 x HK7024 + HK7224, 2 x ON3EBD, 1 x OXIBD, 1 x EPMB, 1 x ELDC, 1 x TS	73
IB	Interface for connecting BlueBUS photocells up to control units which have not been manufactured for this purpose	215
IBT4N	Interface for connecting the O-View programming unit	21
IBW	Interface between PHW/LLW and control units with BlueBUS system	217
INB	Communication interface between Bticino Bus (SCS) and Nice Bus (TTBus and BusT4)	195
INTI1	Era Inti transmitters,1 channel, 433.92 MHz, black	180
INTI1B	Era Inti transmitters,1 channel, 433.92 MHz, blue	180
INTI1G	Era Inti transmitters,1 channel, 433.92 MHz, green	180
INTI1L	Era Inti transmitters,1 channel, 433.92 MHz, liliac	180
INTI1R	Era Inti transmitters,1 channel, 433.92 MHz, red	180
INTI1Y	Era Inti transmitters,1 channel, 433.92 MHz, yellow	180
INTI2	Era Inti transmitters, 2 channels, 433.92 MHz, black	180
INTI2B	Era Inti transmitters, 2 channels, 433.92 MHz, blue	180
INTI2G	Era Inti transmitters, 2 channels, 433.92 MHz, green	180
INTI2L	Era Inti transmitters, 2 channels, 433.92 MHz, liliac	180
INTI2R	Era Inti transmitters, 2 channels, 433.92 MHz, red	180
INTI2Y	Era Inti transmitters, 2 channels, 433.92 MHz, yellow	180
INTIKIT	Era Inti, Kit composed by three 2-channel transmitters Era Inti (red, green, blue) and one receiver OX2	180
IRW	Wireless relay interface for sensitive edges	231
IT4WIFI	Kit containing: 1 Wi-Fi interface, 1 RJ-11 phone cable, 1 IBT4N adapter	174
KA1	6 m cable release kit for KIO	236
KI1	Outside release kit with metal pull-cord and lock and key	37
KIO	Key-operated selector switch for low voltage contacts with release mechanism for metal cord	27

KOVOPLOTOVARY.CZ

Code	Product line	Page
KIOMINI	Aluminium key switch with control and release mechanism	236
L9BAR	Road barrier system for bars from 7 to 9 m, steel case with protective cataphoresis treatment	125
L9BARI	Road barrier system for bars from 7 to 9 m, stainless steel case	125
LFAB4000	L-Fab, Motor for swing gates, underground installation, with leaves up to 4 m, with mechanical limit switch on closing	85
LFAB4024	L-Fab, Motor for swing gates, underground installation, with leaves up to 4 m, with encoder and mechanical limit switch on closing	85
LFAB4024HS	L-Fab HS, Hi-Speed motor for swing gates, underground installation, with leaves up to 4 m or 400 kg, with encoder and mechanical limit switch on closing	31
LFABBOX4	L-Fab accessory, Foundation box with cataphoresis paint finish	31
LFABBOX4I	L-Fab accessory, Stainless steel foundation box	31
LLW	Wireless flashing light with built-in photovoltaic panel	230
LP21	Single-channel metal mass detector 24 V power supply	233
LP22	Two-channel metal mass detector 24 V power supply	233
M3BAR	Road barrier system for bars of 3 m, steel case with protective cataphoresis treatment	121
M3BARI	Road barrier system for bars of 3 m, stainless steel case	121
M5BAR	Road barrier system for bars of 4 or 5 m, steel case with protective cataphoresis treatment	121
M5BARI	Road barrier system for bars of 4 or 5 m, stainless steel case	121
M7BAR	Road barrier system for bars of 5, 6 or 7 m, steel case with protective cataphoresis treatment	121
M7BARI	Road barrier system for bars of 5, 6 or 7 m, stainless steel case	121
MC200	Control unit for a 230 Vac motor for rolling doors	245
MC424L	Control unit for swing gates with one or two 24 Vdc motors, with Solemyo technology	243
MC800	Control unit for one or two 230 V motors with Nice BlueBUS technology and provision for the Opera system	244
MC824H	Control unit for one or two 24 V non-reversible motors with encoder, with Nice BlueBUS technology and provision for Opera and Solemyo	242
MC824HR	Control unit for one or two 24 V reversible motors with encoder, with Nice BlueBUS technology and provision for Opera and Solemyo	242
MC824L	Control unit for one or two Oltre 1824 motors without encoder, with Nice BlueBUS technology and provision for Opera and Solemyo	242
MCA1	Spare control unit for MC824H	242

Code	Product line	Page
MCA2	Spare control unit for MC424L	243
MCA3	Spare control unit, for MC824HR	242
MCA4	Spare control unit, for MC824L	242
MCA5	Spare control unit for MC800	244
MEA1	Mechanical accessory for opening up to 360° for gates max. 2.5 m in length	29
MEA2	Fab accessory, Key unlock system	29
MEA3	Fab accessory, Lever-type key unlock system	29
MEA5	Fab accessory, Lever-type unlock key for MEA3	29
MEA6	Fab accessory, Limit switch bracket	29
MFAB3000	M-Fab, Motor for swing gates with leaves up to 3 m, underground installation, grease lubrication, increased speed	83
MFAB3000L	M-Fab, Motor for swing gates with leaves up to 3 m, underground installation, grease lubrication, cruising speed	83
MFAB3024	M-Fab, Motor for swing gates with leaves up to 3 m	83
MFAB3024HS	M-Fab HS, Hi-Speed motor for swing gates with leaves up to 3 m, with magnetic encoder	29
MFABBOX	Fab accessory, Externally chamfered foundation box with cataphoresis finish with mechanical stop on opening	29
MFABBOXI	Fab accessory, Externally chamfered foundation box in stainless steel with mechanical stop on opening	29
MOCARD	Transponder card programmable via OBOX	223
MOCARDP	Transponder card programmable via OBOX, with sequential coding	223
MORX	Decoder for 1 ETP or up to 4 EDS/EDSI connected in parallel with memory BM1000	220
NDA040	Module for optional potential free outputs	112
NKA3	Spare control unit	93
NKSL400	Naked, Concealed motor for swing gates up to 400 kg, with control unit and absolute encoder	93
NSEA	Instrument for force impact measurement, angular extension	232
NSEL	Instrument for force impact measurement, straight extension	232
NSFB	BlueForce SMART instrument for measuring the impact force compliant with EN12445, with Plug Bluetooth/USB and software included	232

KOVOPLOTOVARY.CZ

Alphabetical index

Code	Product line	Page
NSFS	BlueForce SMART instrument for measuring the impact force compliant with EN12445, with USB interface and software included	232
OBOX2	Connection interface complete with software "O-Box Software Suite", with USB connection cable supplied	189
OBOX2B	Connection interface complete with software "O-Box Software Suite", with USB connection cable and integrated Bluetooth module	189
OLTRE1824	Oltre, invisible motor for swing gates weighing up to 100 kg and with a leaf length of up to 1.8 m, with release lever	61
ON1CE	Era One transmitter, 1 channel, 433.92 MHz, with sequential code for multiple insertion	182
ON1E	Era One transmitter, 1 channel, 433.92 MHz	182
ON1EFM	Era One transmitter, 1 channel, 868.46 MHz	182
ON2CE	Era One transmitter, 2 channels, 433.92 MHz, with sequential code for multiple insertion	182
ON2E	Era One transmitter, 2 channels, 433.92 MHz	182
ON2EFM	Era One transmitter, 2 channels, 868.46 MHz	182
ON3EBD	Era One BD transmitter, 3 channels, bidirectional, 433.92 MHz	176
ON3ELR	Era One LR transmitter, 3 channels, bidirectional, with LoRa® technology, 433.92 MHz	177
ON4CE	Era One transmitter, 4 channels, 433.92 MHz, with sequential code for multiple insertion	182
ON4E	Era One transmitter, 4 channels, 433.92 MHz	182
ON4EFM	Era One transmitter, 4 channels, 868.46 MHz	182
ON9E	Era One transmitter, 9 channels, 433.92 MHz	182
ON9EFM	Era One transmitter, 9 channels, 868.46 MHz	182
ONELRKIT	KIT with LoRa® technology. **Contains:** 2 x ON3ELR, 1 x OXILR, 1 x OX2UBP	177
OTA11	Mechanical accessory, Kit for external unlocking with a metal cord	153
OTA12	Mechanical accessory, Kit for external unlocking with key ratchet	153
OTA2	Mechanical accessory, Motor support bracket (1250 mm long)	153
OTA3	Mechanical accessory, Motor support bracket (2000 mm long)	153
OTA9	Mechanical accessory, Motor support bracket (520 mm long)	153
OVA1	O-View Accessory, Clamp for fitting connectors RJ14	194
OVA2	O-View Accessory, Connectors RJ14, type 6/4, for flat 4-wire cable	194
OVA3	O-View Accessory, RJ14 splitters, type 6/4, for cascade connection	194
OVA4	O-View Accessory, Flat 4-wire cable for connection of devices	194
OVBT	O-View, Bluetooth module for O-View and software for PC, PDA or Smartphone	194
OVBTGSM	O-View, GSM module and software for PC, PDA or Smartphone	194
OVIEW	Unit for control, programming and diagnostics of devices equipped with BUS T4 connection	194
OX2	Prewired receiver 433.92 MHz, 2 channels, without built-in transmitter	188
OX2FM	Prewired receiver 868.46 MHz, 2 channels, without built-in transmitter	188
OX2T	Prewired receiver 433.92 MHz, 2 channels, with built-in transmitter	188
OX2TFM	Prewired receiver 868.46 MHz, 2 channels, with built-in transmitter	188
OX4T	Universal receiver 433.92 MHz, 4 channels, with built-in transmitter	188
OXI	Receiver with connector, 433.92 MHz, 4 channels, without built-in transmitter	188
OXIBD	Radio receiver with connector, 433.92 MHz, 4 channels, with built-in transmitter	176
OXIFM	Receiver with connector, 868.46 MHz, 4 channels, without built-in transmitter	188
OXILR	Radio receiver with connector, bidirectional, with LoRa® technology, 433.92 MHz, 4 channels, with built-in transmitter	177
OXIT	Receiver with connector, 868.46 MHz, 4 channels, with built-in transmitter	188
OXITFM	Prewired receiver 868.46 MHz, 4 channels, with built-in transmitter	188
PHW	Pair of wireless photocells with built-in photovoltaic panel	230
PHWA1	Pair of adapters for PHW on PPH1 posts	230
PLA10	Mechanical accessory, Vertical 12 V electric lock	21
PLA11	Mechanical accessory, Horizontal 12 V electric lock	21
PLA13	Mechanical accessory, Mechanical travel stops for closing and opening manoeuvres	45
PLA14	Mechanical accessory, Screw-adjustable rear bracket	23
PLA15	Mechanical accessory, Screw-adjustable front bracket	23

KOVOPOLOTOVARY.CZ

Code	Product line	Page
PLA6	Mechanical accessory, Rear bracket 250 mm long	45
PLA8	Mechanical accessory, Screw-adjustable front bracket	47
POA3	Spare control unit for HO7124	67
POE	Wall support for Era Photocells	217
PPH1	Era Post, Outdoor aluminium post for 1 photocell medium and large, height 500 mm	225
PPH2	Era Post, Outdoor aluminium post for 2 photocells medium and large, height 1000 mm	225
PPH3	Era Post, Outdoor aluminium post for 1 photocell medium size, height 500 mm	225
PPH4	Era Post, Outdoor aluminium post for 2 photocells medium size, height 1000 mm	225
PPK	Era Post, Outdoor aluminium post for 1 selector, height 1100 mm	225
PROVIEW	Multi-function interface	190
PS124	24 V battery with integrated battery charger	27
PS224	24 Vdc buffer battery	121
PS324	24 V battery with integrated battery charger (for motor in 24 Vdc version)	21
PS424	Buffer battery	63
PS524	Charge card for 7 Ah batteries	35
PSY24	24 V battery box with control circuit and carry handle	229
PW1	Heating element for gearmotors	237
RB1000	Robus, Motor for sliding gates up to 1000 kg with control unit and electromechanical limit switch	99
RB1000P	Robus, Motor for sliding gates up to 1000 kg with control unit and inductive limit switch	99
RB250HS	Robus HS, Hi-Speed motor for sliding gates up to 250 kg with control unit and electromechanical limit switch	33
RB400	Robus, Motor for sliding gates up to 400 kg with control unit and electromechanical limit switch	99
RB400BDKCE	Robus, Kit for sliding gates up to 400 kg with control unit and electromechanical limit switch, bidirectional. **Contains:** 1 x RB400, 2 x ON3EBD, 1 x OXIBD, 1 x EPMB, 1 x ELDC, 1 x TS	101
RB500HS	Robus HS, Hi-Speed motor for sliding gates up to 500 kg with control unit and electromechanical limit switch	33
RB600	Robus, Motor for sliding gates up to 600 kg with control unit and electromechanical limit switch	99

Code	Product line	Page
RB600BDKCE	Robus, Kit for sliding gates up to 600 kg with control unit and electromechanical limit switch, bidirectional. **Contains:** 1 x RB600, 2 x ON3EBD, 1 x OXIBD, 1 x EPMB, 1 x ELDC, 1 x TS	103
RB600P	Robus, Motor for sliding gates up to 600 kg with control unit and inductive limit switch	99
RBA1	Accessory for sliding gates, Inductive limit switch	33
RBA3	Robus accessory, Spare control unit for RB400, RB600/600P, RB1000/1000P and RUN1500/1500P	99
RBA3/HS	Spare control unit for RB250HS and RB500HS	33
RBA4	Road accessory, Spare control unit for RDKCE	105
RDKCE	Road, Kit for sliding gates up to 400 kg and with a leaf length of up to 6 m, with control unit and receiver. **Contains:** 1 x RD400, 1 x FLO2RE, 1 x EPM, 1 x EKS, 1 x ELDC, 1 x TS	105
RN2040	Rondo, Irreversible motor with brake and release device for balanced rolling doors up to 170 kg	167
ROA40	Spare control unit for ROX600	107
ROA6	M4 25x20x1000 mm slotted nylon rack with metal insert for gates weighingup to 500 kg	33
ROA7	M4 rack, zinc coated, 22x22x1000 mm	33
ROA8	M4 rack, 30x8x1000 mm, zinc coated with spacers and screws	33
ROA81	M6 rack, 30x30x1000 mm, zinc coated	35
ROX600KCE	Kit for automating sliding gates up to 600 kg. 230 Vac, built-in control unit, built-in radio receiver. **Contains:** 1 x ROX600, 1 x FLO2RE, 1 x EPM, 1 x EKS, 1 x ELAC, 1 x TS	107
RUA1	Spare control unit for RUN1800/1800P and RUN2500/2500P	111
RUA12	12-teeth pinion, module 6, to be coupled with rack ROA81	35
RUA2	Run accessory, Spare control unit for RUN2500I	111
RUA3	Run accessory, Spare inverter for RUN2500I	111
RUA6	Run accessory, Spare control unit for RUN400HS e RUN1200HS	35
RUN1200HS	Run HS, Hi-Speed motor for sliding gates up to 1500 kg, with control unit and electromechanical limit switch	35
RUN1500	Run, Motor for sliding gates up to 1500 kg, with control unit and electromechanical limit switch	109
RUN1500P	Run, Motor for sliding gates up to 1500 kg, with control unit and inductive limit switch	109
RUN1800	Run, Motor for sliding gates up to 1800 kg, with control unit and electromechanical limit switch	111
RUN1800P	Run, Motor for sliding gates up to 1800 kg, with control unit and inductive limit switch	111

KOVOPLOTOVARY.CZ

Alphabetical index

Code	Product line	Page
RUN2500	Run, Motor for sliding gates up to 2500 kg, with control unit and electromechanical limit switch	111
RUN2500I	Run, Motor for sliding gates up to 2500 kg, with control unit, inverter and electromechanical limit switch	111
RUN2500P	Run, Motor for sliding gates up to 2500 kg, with control unit and inductive limit switch	111
RUN400HS	Run HS, Hi-Speed motor for sliding gates up to 400 kg, with control unit and electromechanical limit switch	35
S4BAR	Bar system for bars up to 4 m, with steel case with protective cataphoresis treatment and paint finish	119
S4BARI	Bar system for bars up to 4 m, with stainless steel case	119
SFAB2024	S-FAB, Motor for swing gates with leaves up to 2.3 m, underground installation	77
SFAB2024BDKCE	S-FAB, Kit for swing gates with a leaf length of up to 2.3 m, underground installation, bidirectional. **Contains:** 2 x SFAB2024, 2 x SFABBOX, 2 x ON3BD, 1 x MC424L, 1 x OXIBD, 1 x EPM, 1 x ELDC, 1 x TS	79
SFAB2124	S-FAB, Motor for swing gates with leaves up to 2.3 m with encoder, underground installation	77
SFAB2124BDKCE	S-FAB, Kit for swing gates with a leaf length of up to 2.3 m, underground installation, BlueBUS, comp. with Opera, bidirectional. **Contains:** 2 x SFAB2124, 2 x SFABBOX, 2 x ON3BD, 1 x MC824H, 1 x OXIBD, 1 x EPMB, 1 x ELDC, 1 x TS	81
SFABBOX	Fab accessory, Externally foundation box, with cataphoresis paint finish	77
SIA1	S4BAR and WIDE accessory, Anchorage base with clamps	119
SIA2	WIDE accessory, Anchorage base with clamps	133
SLH400	Slight, Irreversible motor for sliding gates up to 400 kg with built-in control unit and absolute encoder	95
SLH400BDKCE	Slight Kit, Kit for sliding gates up to 400 kg with control unit and absolute encoder, built-in LED light, bidirectional. **Contains:** 1 x SLH400, 2 x ON3EBD, 1 x OXIBD, 1 x EPMB, 1 x ELDC, 1 x TS	97
SMXI	Universal pre-wired receiver, up to 4 channels, with memory containing 256 codes - Flo coding	188
SN6031	Spinbus, Motor for sectional doors and up-and-over garage doors, with built-in control unit, 800 N	147
SN6041	Spinbus, Motor for sectional doors and up-and-over garage doors, with built-in control unit, 1000 N	147
SNA1	Spinbus accessory, Spare control unit for SPIN10KCE and SPIN11KCE	151
SNA16	Spinbus accessory, Quick-connect brackets for ceiling mounting	145
SNA20	Spinbus accessory, Spare control unit for SPIN23KCE	149
SNA3	Spinbus accessory, Spare control unit for SPIN30/SN6031	145
SNA30	Spinbus accessory, Preassembled 3 m guide	147
SNA30C	Spinbus accessory, Pre-mounted 3 m chain track	147
SNA31	Spinbus accessory, 1 m extension for guide SNA30	147
SNA31C	Spinbus accessory, 1 m extension for guide SNA30C	147
SNA4	Spinbus accessory, Spare control unit for SPIN40/SN6041	145
SO2000	Soon, Motor for sectional door up to 5 m, with absolute encoder	157
SOA2	Soon accessory, Spare control unit SO2000	157
SPA10	Kit with additional ceiling fixing bracket for Spyrail	37
SPA2	Spinbus accessory, Kit for unlocking from the outside with cable	37
SPA5	Spinbus accessory, Oscillating arm sliding on bearings with optimised structure for projecting up-and-over doors	37
SPA6	Spinbus accessory, Large 585 mm long connecting arm	37
SPA7	Spinbus accessory, Kit of two additional fixing brackets	145
SPIN10KCE	Spinkit, For sectional doors up to 8.8 m^2 and up-and-over doors up to 9.8 m^2. **Contains:** 1 x SN6011, 1 x FLO2RE, guide in three 1-metre long sections	151
SPIN11KCE	Spinkit, For sectional doors up to 8.8 m^2 and up-and-over doors up to 9.8 m^2. **Contains:** 1 x SN6011, 1 x FLO2RE, pre-mounted 3 m guide	151
SPIN20BDKCE	Spinbuskit, For sectional doors up to 10.5 m^2 and up-and-over doors up to 11.8 m^2, bidirectional. Compatible with Solemyo and Opera. **Contains:** 1 x SN6021, 1 x ON3EBD, guide in three 1-metre long sections	149
SPIN22BDKCE	Spinbuskit, For sectional doors up to 10.5 m^2 and up-and-over doors up to 11.8 m^2, bidirectional. Compatible with Solemyo and Opera. **Contains:** 1 x SN6021, 1 x ON3EBD, guide in one 3-metre section + one 1-metre section	149
SPIN23BDKCE	Spinbuskit, For sectional doors up to 10.5 m^2 and up-and-over doors up to 11.8 m^2, bidirectional. Compatible with Solemyo and Opera. **Contains:** 1 x SN6021, 1 x ON3EBD, pre-mounted 3 m guide	149
SPIN30	Spinbus, For sectional doors up to 12.5 m^2 and up-and-over doors up to 11.8 m^2, 800 N	145
SPIN40	Spinbus, For sectional doors up to 12.5 m^2 and up-and-over doors up to 11.8 m^2, 1000 N	145
SPY550KCE	Spykit 550, For sectional doors up to 9 m^2 and up-and-over doors up to 10.5 m^2, 550 N. **Contains:** 1 x SPY550, 1 x SPYBOX, 1 x FLO2RE	141
SPY650BDKCE	Spykit 650, For sectional doors up to 10.5 m^2 and up-and-over doors up to 11.5 m^2, 650 N, bidirectional. **Contains:** 1 x SPY650, 1 x SPYBOXHS, 1 x OXIBD, 1 x ON3EBD	143
SPY650HSBDKCE	Spykit 650 HS BD, For sectional doors up to 10.5 m^2 and up-and-over doors up to 11.5 m^2, 650 N, bidirectional. **Contains:** 1 x SPY650HS, 1 x SPYBOXHS, 1 x OXIBD, 1 x ON3EBD	37
SPY800BDKCE	Spykit 800, For sectional doors up to 12.5 m^2 and up-and-over doors up to 14 m^2, 800 N, bidirectional. **Contains:** 1 x SPY800, 1 x SPYBOXHS, 1 x OXIBD, 1 x ON3EBD	143
SPYLIGHT	LED light module accessory for SPYRAIL	37
SPYRAIL081	Spy accessory, 0.8 m extension with assembly accessories (to add to the SPYRAIL321 or SPYRAIL162 rails)	37

KOVOPLOTOVÁRY.CZ

Code	Product line	Page
SPYRAIL162	Spy accessory, 2 x 1.6 m rails with assembly accessories	37
SPYRAIL321	Spy accessory, 1 x 3.2 m rail with assembly accessories	37
SU2000	Sumo, For sectional doors and two-wings sliding doors up to 35 m²	159
SU2000V	Sumo, For sectional doors and two-wings sliding doors up to 25 m², high speed	159
SU2000VV	Sumo, For sectional doors and two-wings sliding doors up to 15 m², super high speed	159
SU2010	Sumo, For sectional doors and two-wings sliding doors up to 35 m², IP54	159
SYA1	Solemyo accessory, Power supply unit for charging the battery PSY24 from the supply mains	229
SYKCE	Solar power kit comprising SYP photovoltaic panel and PSY24 battery box with charging control circuit	229
SYP	Photovoltaic panel for 24 V supply with maximum power 15 W	229
SYP30	Photovoltaic panel for 24 V supply with maximum power 30 W	229
TCA65	Sensitive edges accessory, Aluminium profile L=200 cm	232
TCB65	Sensitive edge in 10 m rolls	232
TCBS60	Passive sensitive edge in 10 m rolls	233
TCE	Sensitive edge accessory, Control interface for sensitive edge	232
TCF	Sensitive edge accessory, Scissors for cutting safety sensitive edges	232
TCK	Sensitive edge accessory, Kit for 8 sensitive edges composition	232
TCW1	Sensor for sensitive edge with wireless technology and battery power supply	231
TCW2	Sensor for sensitive edge with wireless technology and PV power supply	231
TN2010L	Ten, Upgraded motor for projecting and non projecting up-and-over doors, with control unit, absolute encoder and BlueBUS	153
TN2020L	Ten, Upgraded motor for projecting and non projecting up-and-over doors, without control unit	153
TN2030L	Ten, Upgraded motor for projecting and non projecting up-and-over doors, with control unit and receiver, mechanical limit switch	153
TNA1	Ten accessory, Spare control unit for TN2030L and TNLKCE	153
TNA2	Ten accessory, Spare control unit for TN2010L	153
TNA38	Ten accessory, Driving device for transmission shafts	153

Code	Product line	Page
TNA4	Ten accessory, 20x20 mm drive shaft (1500 mm long)	153
TNA5	Ten accessory, Pair of standard straight telescopic arms	153
TNA6	Ten accessory, Pair of standard curved telescopic arms	153
TNA8	Ten accessory, 20x20 mm drive shaft (200 mm long)	153
TNA9	Ten accessory, Additional connection cable and supports for wall-mounting of PS324 battery	37
TNLKCE	Ten, Upgraded kit for projecting and non projecting up-and-over doors with control unit, receivers and mechanical limit switch	155
TO4005	Toona, Motor for swing up to 3 m, with limit switch on opening, increased speed	45
TO4006	Toona, Motor for swing up to 3 m, with limit switch on opening and closing, increased speed	45
TO4015	Toona, Motor for swing up to 3 m, with limit switch on opening, cruising speed	45
TO4024	Toona, Motor for swing up to 3 m, mechanical stop on opening	45
TO4605	Toona, Motor for swing up to 3 m, limit switch on opening, increased speed	45
TO5015	Toona, Motor for swing up to 5 m, with limit switch on opening, cruising speed	47
TO5016	Toona, Motor for swing up to 5 m, with limit switch on opening and closing, cruising speed	47
TO5024	Toona, Motor for swing up to 5 m, mechanical stop on opening	47
TO5024HS	Toona 5 HS, Hi-Speed motor for swing up to 5 m, with magnetic encoder, mechanical stop on opening and closing	21
TO5024I	Toona, Motor for swing up to 5 m, mechanical stop on opening, for intensive use	47
TO5605	Toona, Reversible motor for swing up to 5 m, limit switch on opening, increased speed	47
TO6024HS	Toona 6 HS, Hi-Speed motor for swing up to 6 m, with magnetic encoder, mechanical stop on opening and closing	21
TO7024	Toona, Motor for swing up to 7 m, mechanical stop on opening and closing	49
TOONA4024BDKCE	Kit for automating swing gates with a leaf length of up to 3 m, 24 Vdc, surface mounted, bidirectional. **Contains:** 1 x TO4024, 2 x ON3EBD, 1 x MC824H, 1 x OXIBD, 1 x EPMB, 1 x ELDC, 1 x TS	51
TS	Signboard	21
TT1L	Control unit for installations for lighting/irrigation systems, with radio receiver, IP55 protection	205
TT1N	Control unit for a 230 Vac motor, with radio receiver, IP55 protection	205
TT1V	433.92 MHz frequency receiver, rolling code. For Venetian blinds. To control motors up to 500 W	205

KOVOPLOTOVARY.cz

Alphabetical index

Code	Product line	Page
TT2D	Control unit for installations for 230 Vac lighting systems, with receiver and switching module	203
TT2L	Control unit for installations for 230 Vac lighting systems, with receiver	203
TT2N	Miniaturized control unit for a 230 Vac motor, with radio receiver	201
TT2Z	Radio receiver and control unit for dry contact controlled motors, four-wire motors and lights	202
TTDMS	Recessed control unit with built-in radio receiver for electrical loads up to 250 W, on/off and dimmer functions	204
TTN3724HS	Titan HS, non-reversible Hi-Speed motor, 24 Vdc, with magnetic encoder, for swing gates with leafs of up to 3.7 m or 450 kg	25
TTN3724RHS	Titan HS, reversible Hi-Speed motor, 24 Vdc, with magnetic encoder, for swing gates with leafs of up to 3.7 m or 450 kg	25
TTN6024HS	Titan HS, non-reversible Hi-Speed motor, 24 Vdc, with magnetic encoder, for swing gates with leaves of up to 6 m or 450 kg	25
TTN6024RHS	Titan HS, reversible Hi-Speed motor, 24 Vdc, with magnetic encoder, for swing gates with leaves of up to 6 m or 450 kg	25
TTPCI	BusT4 – PC interface	238
TTX4	Recessed transmitter, 4 channels, with mains power	200
TTXB4	Recessed transmitter, 4 channels, with long battery life power	200
TUB4000	Irreversible gear motor for sliding gates weighing up to 4000 kg, electromechanical limit switch, 400 Vac, with built-in D-PRO 500 control unit	112
TW1	Regulation thermostat with trimmer	237
WA10	Bars accessory, Red adhesive reflector strips	119
WA11	Bars accessory, Adjustable stand for bars	119
WA12	Bars accessory, Mobile stand for bars	123
WA13	Bars accessory, Aluminium rack (2 m) for WA1, WA21, WA22	123
WALKY1024BDKCE	Walky, Kit for swing gates with a leaf length of up to 1.8 m, bidirectional. **Contains:** 1 x WL1024C, 2 x ON3EBD, 1 x OXIBD, 1 x TS	63
WALKY2024BDKCE	Walky, Kit for swing gates with a leaf length of up to 1.8 m, bidirectional. **Contains:** 1 x WL1024C + 1 x WL1024, 2 x ON3EBD, 1 x OXIBD, 1 x EPMB, 1 x WLT, 1 x TS	65
WAX	Ondo, Table holder for Nice Way, white plastic + Ice Blue rubber	187
WCF	Go, Mini cover for NiceWay, fern green	187
WCG	Go, Mini cover for NiceWay, graphite	187
WCI	Go, Mini cover for NiceWay, Ice Blue	187
WCO	Go, Mini cover for NiceWay, orange	187
WG3524HS	Wingo HS, Hi-Speed motor for swing gates with leaves up to 3 m, with magnetic encoder, mechanical stop on opening and closing	23
WIA10	Wide accessory, Pivot joint	132
WIA11	Wide accessory, Joint for bar for Wide M	132
WIA20	Wide accessory, Spare control unit	131
WIDEL	Wide, Electromechanical road barrier system for bars up to 7 m, with painted galvanised steel case	131
WIDELI	Wide, Electromechanical road barrier system for bars up to 7 m, with stainless steel case	131
WIDEM	Wide, Electromechanical road barrier system for bars up to 4 m, with painted galvanised steel case	131
WIDEMI	Wide, Electromechanical road barrier system for bars up to 4 m, with stainless steel case	131
WIDES	Wide, Electromechanical road barrier system for bars up to 4 m, with painted galvanised steel case	131
WIDESI	Wide, Electromechanical road barrier system for bars up to 4 m, with stainless steel case	131
WINGO4024BDKCE	Wingo, Kit for swing gates with a leaf length of up to 2 m, 24 Vdc, surface mounted, bidirectional. **Contains:** 1 x WG4024, 2 x ON3EBD, 1 x MC424L, 1 x OXIBD, 1 x EPM, 1 x ELDC, 1 x TS	55
WINGO4BDKCE	Kit for automating swing gates with a leaf length of up to 2 m, surface mounted, bidirectional. **Contains:** 1 x WG4000, 2 x ON3EBD, 1 x MC800, 1 x OXIBD, 1 x EPM, 1 x ELAC, 1 x TS	53
WINGO5024BDKCE	Wingo, Kit for swing gates with a leaf length of up to 3.5 m, 24 Vdc, surface mounted, bidirectional. **Contains:** 1 x WG5024, 2 x ON3EBD, 1 x MC424L, 1 x OXIBD, 1 x EPM, 1 x ELDC, 1 x TS	59
WINGO5BDKCE	Wingo, Kit for swing gates with a leaf length of up to 3.5 m, surface mounted, with MC800, bidirectional. **Contains:** 1 x WG5000, 2 x ON3EBD, 1 x MC800, 1 x OXIBD, 1 x EPM, 1 x ELAC, 1 x TS	57
WLA1	Walky accessory, Spare control unit for WL1024C	63
WLT	Wallyght, Multi-function Led indicator	227
WM001C	Niceway, Single channel module to control 1 automation system	185
WM001G	Niceway, Module to control 1 Open-Stop-Close automation system	185
WM002G	Niceway, Module to control 2 Open-Stop-Close automation systems	185
WM003C	Niceway, Three channel module to control 3 automation systems	185
WM003C1G	Niceway, Module to control 3 Step-by-Step and 1 Open-Stop-Close automation systems	185
WM003G	Niceway, Module to control 3 Open-Stop-Close automation systems	185
WM004G	Niceway, Module to control 4 Open-Stop-Close automation systems and sun sensor activation command	185

KOVOPOLOTOVARY.CZ

Code	Product line	Page
WM006G	Niceway, Module to control 6 Open-Stop-Close automation systems	185
WM009C	Niceway, Nine channel module to control 9 Step-by-Step automation systems	185
WM080G	Niceway, Module to control 80 Open-Stop-Close automation systems and sun sensor activation command	185
WM240C	Niceway, Module to control 240 Step-by-Step automation systems	185
WRA	Opla, Rectangular wall plate, aluminium	186
WRB	Opla, Rectangular wall plate, black	186
WRG	Opla, Rectangular wall plate, graphite	186
WRS	Opla, Rectangular wall plate, seawater	186
WRT	Opla, Rectangular wall plate, neutral transparent	186
WRW	Opla, Rectangular wall plate, white	186
WSA	Opla, Squared wall plate, aluminium	186
WSB	Opla, Squared wall plate, black	186
WSG	Opla, Squared wall plate, graphite	186
WSS	Opla, Squared wall plate, seawater	186
WST	Opla, Squared wall plate, neutral transparent	186
WSW	Opla, Squared wall plate, white	186
WWW	Ondo, Magnetic wall support for Ondo	187
XBA10	Bars accessory, Pivoting connection for bars up to 4 m	122
XBA11	Joint for bars XBA15 and XBA14 (from 1950 mm to 2400 mm)	122
XBA13	Bars accessory, Rubber impact protection strip	119
XBA14	Bars accessory, White paint-finished aluminium bar 69x92x4150 mm	123
XBA15	Bars accessory, White paint-finished aluminium bar 69x92x3150 mm	122
XBA16	Bars accessory, Anchorage base with clamps	122
XBA17	Bars accessory, Anchorage base with clamps	126

Code	Product line	Page
XBA18	Bars accessory, Indicator lights for click fixture on upper or lower side of bar. Lenght 8 m	123
XBA19	Bars accessory, White paint-finished aluminium bar 45x58x4000 mm	119
XBA20	Spare control unit for S4BAR	119
XBA4	Bars accessory, Indicator lights for click fixture on upper or lower side of bar	119
XBA5	Bars accessory, White paint-finished aluminium bar 69x92x5150 mm	123
XBA6	Bars accessory, Indicator lights for click fixture on upper or lower side of bar. Length 6 m	123
XBA7	Bars accessory, Integrable flashing light	119
XBA8	Bars accessory, Integrable traffic light	122
XBA9	Bars accessory, Expansion joint	123

KOVO POLOTOVARY.CZ

KOVOPOLOTOVARY.CZ

KOVOPOLOTOVARY.CZ

I nostri prodotti e le nostre tecnologie
sono protette con brevetti, modelli
di design e marchi. Qualsiasi violazione
sarà perseguita legalmente.

We make even the smallest of gestures extraordinary.

Nice,
a world without barriers.

Automation and control systems for gates, garage doors, blinds, awnings and rolling shutters and alarm systems for all types of space, from private homes to large public buildings.

www.niceforyou.com

Nice SpA
Oderzo, TV, Italy

Nice

NiceLoveEarth

Nice cares for the environment.
Using natural paper it avoids excessive use of raw materials and forest exploitation.
Waste is reduced, energy is saved and climate quality is improved.

CATGD19/EN/00/07-19 • The information shown in this publication is purely indicative. Nice reserves the right to make any modifi cations to the products as it sees fit. **Product Design** Roberto Gherlenda

KOVOPOLOTOVARY.CZ